Product Data Sheet

1129 Medical Caster Series

PPR (Pearlescent dark gray) Wheel Diameter × Wheel Width 125 x 31mm

EAN

YJ-11290500266443

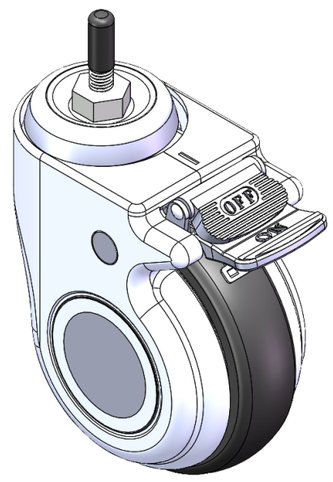

Picture may differ from original product

Casters with a Total Brake and With locking system. Threaded Stem Riveted Pressed Fork —M10-P1.5.
Zine-Plated, Mounting Type - Threaded Stem with thread protector.
High-Quality Impact-Resistant Polypropylene Wheel Center with High-Quality Reinforced Polypropylene Rubber (TPR) Wheel Tread.
Pearl-gray finish. Bearings—Ball Bearings.

Wheel tread: Thermoplastic rubber elastomer (TPR)

Wheel Center: Made of high-quality impact-resistant polypropylene

Drawings are for reference only and may differ from the product

Technical Data

◉ Imperial ○ Metric

Wheel Diameter	5 "
Wheel Width	1-1/4 "
Wheel Bearing	Wheels With Ball Bearings
Threaded Stem	M10-P1.5
Threaded Size	1-3/8 "
Offset	1-7/16 "
Swivel Interference	8-3/4 "
Overall Height	6-1/2 "
Swivel Radius	4-3/8 "
Hardness Of Tread	82±5° Shore A
Load Capacity (Dynamic)	243lbs
Load Capacity (Static)	364lbs
Temperature	-4°F to +140°F
Fork Type	Swivel Caster With Total Brake
Stainless	N/A
Electrical Conductivity	N/A
Anti-Static	N/A
Weight	2.2lbs
Standard	ISO22883

Advantages at a glance

Rolling Resistance	● ● ● ● ○
Operating Noise	● ● ● ● ○
Floor Surface Preservation	● ● ● ● ●

Dimensions

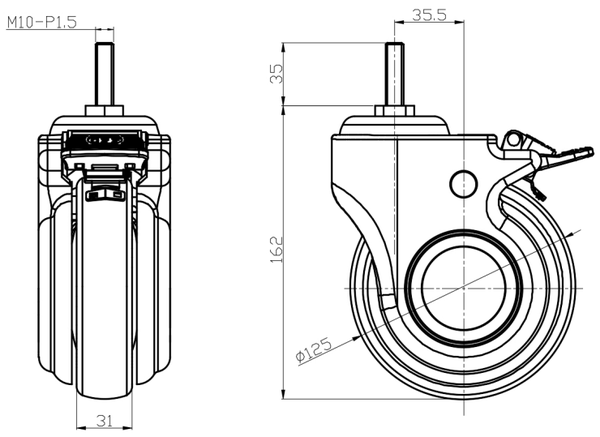

Mounting

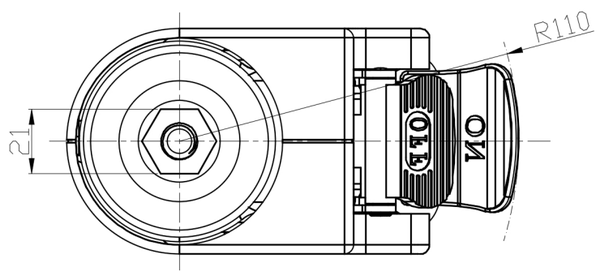

* For any deviation between metric and imperial spec, please refer to the metric spec.

© Copyright 2025 DershengInternational www.dersheng.com