Product Data Sheet

1129 Medical Caster Series

AQPU (grey round) Wheel Diameter × Wheel Width 125 x 31mm

EAN

YJ-11290500605026

Swivel Caster with thread-Riveted Stamping Fork—M16-P2
Chrome-Plated finish, Mounting Type - Threaded Stem
Aluminum core, High Quality Polyurethane Wheel Tread
Gray, Bearing—Ball Bearing.

Wheel tread: Made of high-quality polyurethane
Wheel Center: aluminum core

Drawings are for reference only and may differ from the product

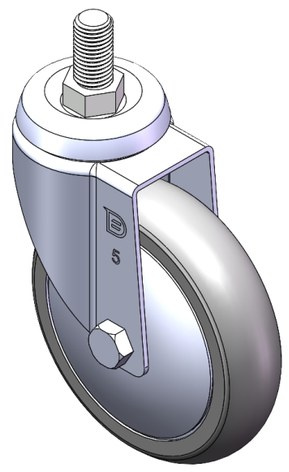

Picture may differ from original product

Technical Data

◉ Metric ○ Imperial

Wheel Diameter	125mm
Wheel Width	31mm
Wheel Bearing	Wheels With Ball Bearings
Threaded Stem	M16-P2
Threaded Size	30mm
Offset	35.5mm
Swivel Interference	196mm
Overall Height	162mm
Swivel Radius	98mm
Hardness Of Tread	77±5° Shore A
Load Capacity (Dynamic)	230kgs
Load Capacity (Static)	345kgs
Temperature	-20°C to +70°C
Fork Type	Swivel Caster
Stainless	N/A
Electrical Conductivity	N/A
Anti-Static	N/A
Weight	0.99kgs
Standard	ISO22883

Advantages at a glance

Rolling Resistance	● ● ● ● ●
Operating Noise	● ● ● ● ●
Floor Surface Preservation	● ● ● ● ●

Dimensions

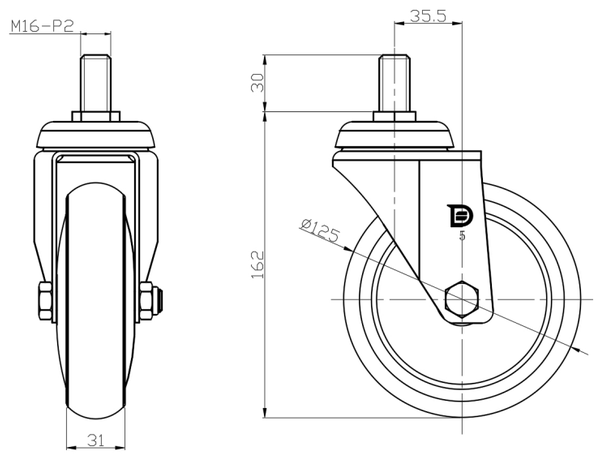

Mounting

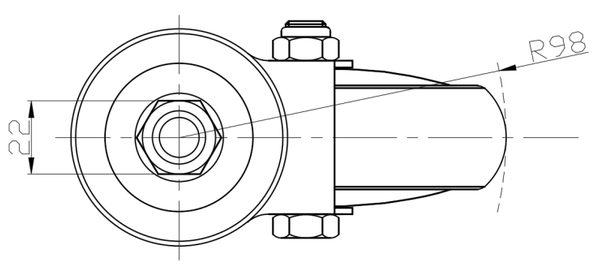

* For any deviation between metric and imperial spec, please refer to the metric spec.

© Copyright 2025 DershengInternational www.dersheng.com