Product Information Sheet

1138 38 Series Central Locking Caster Series

Resolute (Pearlescent dark gray) Wheel Diameter x Wheel Width 100 x 31mm

EAN

YJ-11380400458040

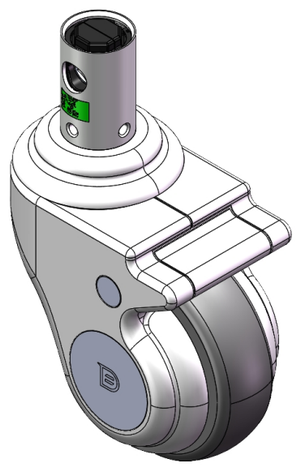

Picture may differ from original product

Central lockinging with hexagonal cam control on short lever, Total Brake Caster. Single Bolthole engagement. Punching. Pressure foot bracket.
Zine-Plated surface, hollow Mounting Type device.
High-Quality Impact-Resistant Polypropylene Wheel Center, High-Quality Reinforced Polypropylene Rubber (TPR) Wheel Tread.
Pearl dark gray, Bearing—Ball Bearings.

Wheel tread: Thermoplastic rubber elastomer (TPR)

Wheel Center: Made of high-quality impact-resistant polypropylene

Drawings are for reference only and may differ from the product

Technical Data

◉ Metric ○ Imperial

Wheel Diameter	100mm
Wheel Width	31mm
Wheel Bearing	Wheels With Ball Bearings
Stem Diameter	32mm
Stem Length	50mm
Offset	41mm
Swivel Interference	188mm
Overall Height	141mm
Swivel Radius	94mm
Hardness Of Tread	82±5° Shore A
Load Capacity (Dynamic)	70kgs
Load Capacity (Static)	105kgs
Temperature	-20°C to +60°C
Fork Type	Swivel Caster With Total Brake
Stainless	N/A
Electrical Conductivity	N/A
Anti-Static	N/A
Weight	0.93kgs
Standard	ISO22881

Advantages at a glance

Rolling Resistance	● ● ● ● ○
Operating Noise	● ● ● ● ○
Floor Surface Preservation	● ● ● ● ●

Dimensions

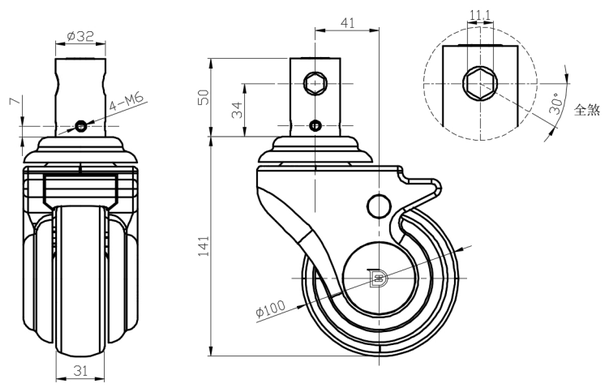

Mounting

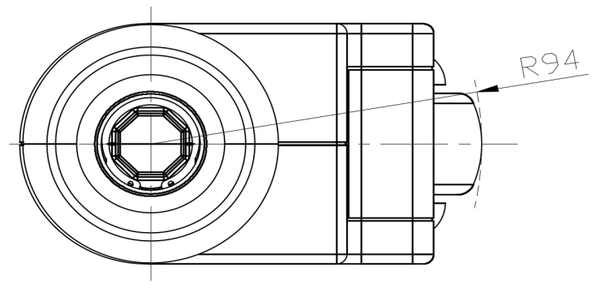

* For any deviation between metric and imperial spec, please refer to the metric spec.

© Copyright 2025 DershengInternational www.dersheng.com