Product Information Sheet

1138 38 Series Central Locking Caster Series

Resolute (Pearlescent dark gray) Wheel Diameter x Wheel Width 100 x 31mm

EAN

YJ-11380400458040

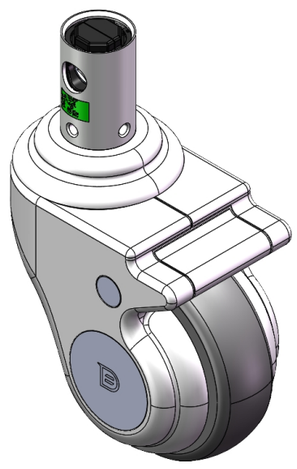

Picture may differ from original product

Central lockinging with hexagonal cam control on short lever, Total Brake Caster. Single Bolthole engagement. Punching. Pressure foot bracket.
Zine-Plated surface, hollow Mounting Type device.
High-Quality Impact-Resistant Polypropylene Wheel Center, High-Quality Reinforced Polypropylene Rubber (TPR) Wheel Tread.
Pearl dark gray, Bearing—Ball Bearings.

Wheel tread: Thermoplastic rubber elastomer (TPR)

Wheel Center: Made of high-quality impact-resistant polypropylene

Drawings are for reference only and may differ from the product

Technical Data

◉ Imperial ○ Metric

Wheel Diameter	4 "
Wheel Width	1-1/4 "
Wheel Bearing	Wheels With Ball Bearings
Stem Diameter	1-5/16 "
Stem Length	2 "
Offset	1-5/8 "
Swivel Interference	7-1/2 "
Overall Height	5-9/16 "
Swivel Radius	3-3/4 "
Hardness Of Tread	82±5° Shore A
Load Capacity (Dynamic)	154lbs
Load Capacity (Static)	231lbs
Temperature	-4°F to +140°F
Fork Type	Swivel Caster With Total Brake
Stainless	N/A
Electrical Conductivity	N/A
Anti-Static	N/A
Weight	2.1lbs
Standard	ISO22881

Advantages at a glance

Rolling Resistance	● ● ● ● ○
Operating Noise	● ● ● ● ○
Floor Surface Preservation	● ● ● ● ●

Dimensions

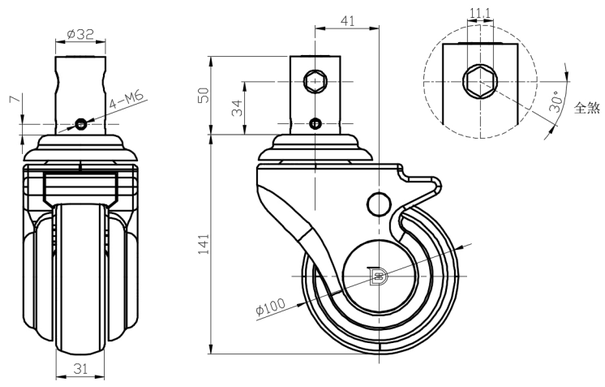

Mounting

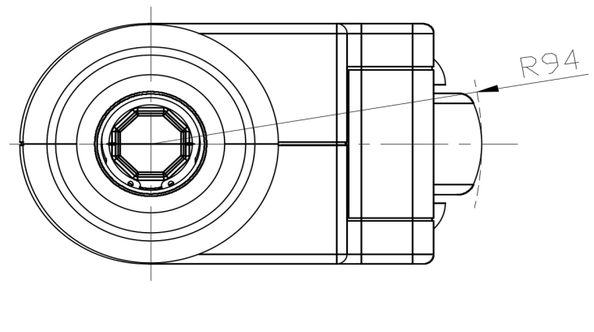

* For any deviation between metric and imperial spec, please refer to the metric spec.

© Copyright 2025 DershengInternational www.dersheng.com