Product Data Sheet

1139-1 Series — Medium Duty General Purposes Caster (American Style)

Rubber Wheel Diameter × Wheel Width 75 x 30mm

EAN

YJ-11390300062913

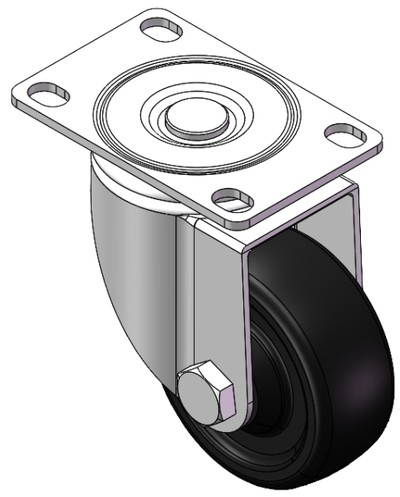

Picture may differ from original product

Swivel Caster with Riveted Fork and Stamping Fork - premium Fork
Zine-Plated, Mounting Type - Top Plate
Reinforced Polypropylene core with High-Quality Resilient Rubber Wheel Tread
Black, Plain Bearing.

Wheel surface: high-quality elastic rubber
Wheel Center: Thermoplastic (PA6)

Drawings are for reference only and may differ from the product

Technical Data

◉ Imperial ○ Metric

Wheel Diameter	3 "
Wheel Width	1-3/16 "
Wheel Bearing	Wheels With Ball Bearings
Plate Size	3-11/16 " x 2-7/16 "
Bolt Hole Spacing	2-15/16 " x 1-13/16 "
Plate Hole	9/16 " x 3/8 "
Offset	1-3/16 "
Swivel Interference	136
Overall Height	4-1/4 "
Swivel Radius	2-11/16 "
Hardness Of Tread	80±5° Shore A
Load Capacity (Dynamic)	154lbs
Load Capacity (Static)	231lbs
Temperature	-4°F to +248°F
Fork Type	Swivel Caster
Stainless	N/A
Electrical Conductivity	N/A
Anti-Static	N/A
Weight	1.4lbs
Standard	ISO22883

Advantages at a glance

Rolling Resistance	● ● ● ○ ○
Operating Noise	● ● ● ● ○
Floor Surface Preservation	● ● ● ● ○

Dimensions

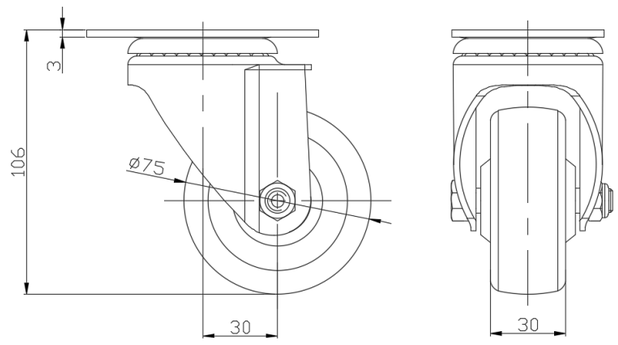

Mounting

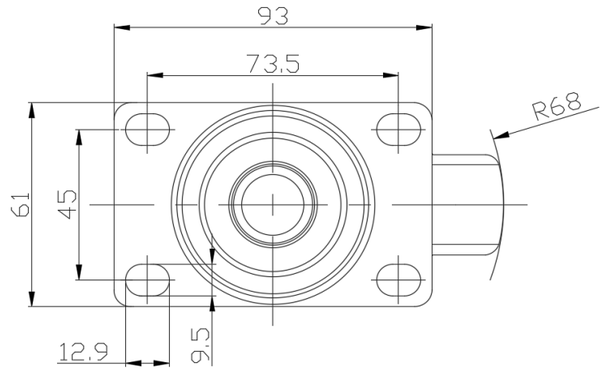

* For any deviation between metric and imperial spec, please refer to the metric spec.

© Copyright 2025 DershengInternational www.dersheng.com