Product Data Sheet

1139 Medium Duty General Purposes Caster Series

MRC (Black) Wheel Diameter × Wheel Width 76 x 32mm

EAN

YJ-11390300076023

Side Brake Locking system. Threaded Riveted Stamping Fork - M12-P1.75 Extended control lever surface, Mounting Type - Threaded Stem device Reinforced Polypropylene and Wheel Tread Wheels - Plain Bearing

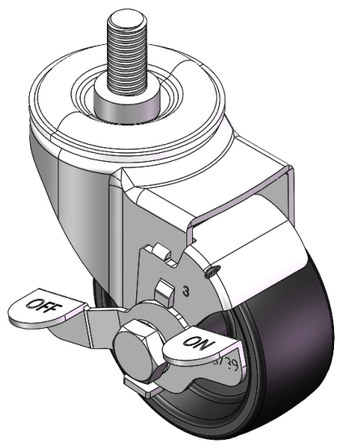

Picture may differ from original product

Wheel tread: Thermoplastic (PA6)

Wheel Center: Thermoplastic (PA6)

Drawings are for reference only and may differ from the product

Technical Data

◉ Imperial ○ Metric

Wheel Diameter	3 "
Wheel Width	1-5/16 "
Wheel Bearing	Wheel With Plain Bearing
Threaded Stem	M12-P1.75
Threaded Size	1 "
Offset	1-1/2 "
Swivel Interference	6-3/8 "
Overall Height	4-1/16 "
Swivel Radius	3-3/16 "
Hardness Of Tread	75±5° Shore D
Load Capacity (Dynamic)	220lbs
Load Capacity (Static)	661lbs
Temperature	-4°F to +176°F
Fork Type	Swivel Caster With Side Brake
Stainless	N/A
Electrical Conductivity	N/A
Anti-Static	N/A
Weight	1.3lbs
Standard	ISO22883

Advantages at a glance

Rolling Resistance	● ● ● ● ●
Operating Noise	● ● ○ ○ ○
Floor Surface Preservation	● ● ○ ○ ○

Dimensions

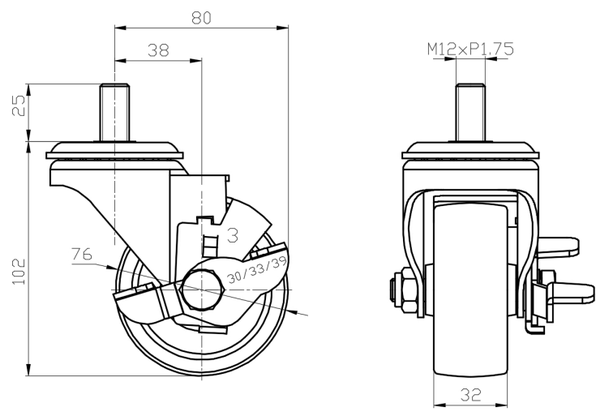

Mounting

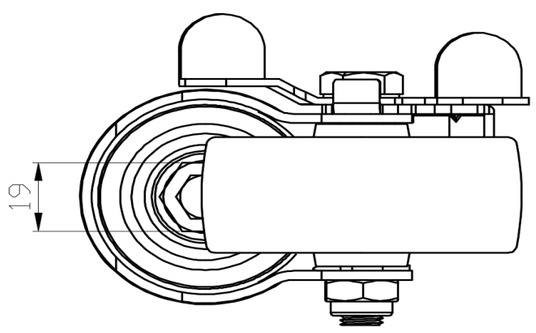

* For any deviation between metric and imperial spec, please refer to the metric spec.

© Copyright 2025 DershengInternational www.dersheng.com