Product Data Sheet

1139 Medium Duty General Purposes Caster Series

PPR (black) Wheel Diameter × Wheel Width 75 x 31mm

EAN

YJ-11390300262014



Picture may differ from original product

Swivel Casters, Top Plate Riveted Fork - 75 x 45 mm (3" x 1-3/4") Bolt Hole Spacings Surface electroplating, Top Plate (4T) installation device High-quality Impact Resistance Polypropylene Wheel Center,High-Quality Thermoplastic Rubber (TPR) Wheel Tread (Wheel Tread Added thermoplastic shrink film protection) Black, Bearing - Ball Bearing.

Wheel tread: Thermoplastic rubber elastomer (TPR)

Wheel Center: Made of high-quality impact-resistant polypropylene

Drawings are for reference only and may differ from the product

Technical Data

◉ Imperial ○ Metric

Wheel Diameter	3 "
Wheel Width	1-1/4 "
Wheel Bearing	Wheels With Ball Bearings
Plate Size	3-13/16 " x 2-9/16 "
Bolt Hole Spacing	
Plate Hole	1/2 " x 23/64 "
Offset	1-1/2 "
Swivel Interference	6 "
Overall Height	4-3/16 "
Swivel Radius	3 "
Hardness Of Tread	82±5° Shore A
Load Capacity (Dynamic)	198lbs
Load Capacity (Static)	298lbs
Temperature	-4°F to +140°F
Fork Type	Swivel Caster
Stainless	N/A
Electrical Conductivity	N/A
Anti-Static	N/A
Weight	1.5lbs
Standard	ISO22883

Advantages at a glance

Rolling Resistance	● ● ● ● ○
Operating Noise	● ● ● ● ○
Floor Surface Preservation	● ● ● ● ●

Dimensions

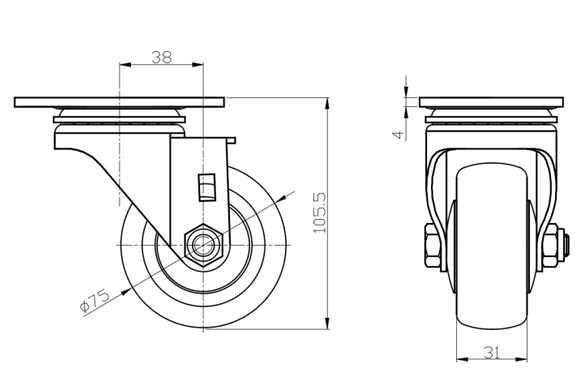

Mounting

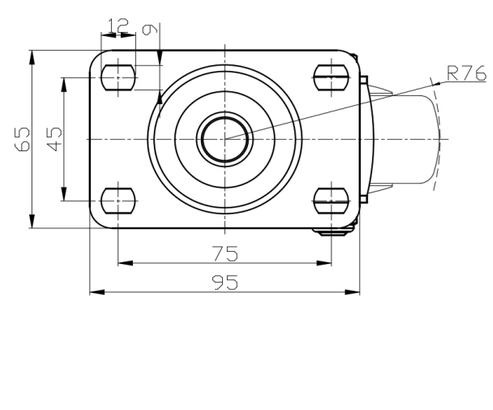

* For any deviation between metric and imperial spec, please refer to the metric spec.

© Copyright 2025 DershengInternational www.dersheng.com