Product Data Sheet

1139 Medium Duty General Purposes Caster Series

PPR (black) Wheel Diameter × Wheel Width 75 x 31mm

EAN

YJ-11390300266014

Castors with Total Brake Locking system. Thread Riveting Stamping Tripod—M12-P1.75 Surface electroplating, Threaded Stem installation device Reinforced impact-resistant High-quality Impact Resistance Polypropylene Wheel Center,High-Quality Thermoplastic Rubber (TPR) wheel tread Black, Bearing—Ball Bearing.

Wheel tread: Thermoplastic rubber elastomer (TPR)

Wheel Center: Made of high-quality impact-resistant polypropylene

Drawings are for reference only and may differ from the product

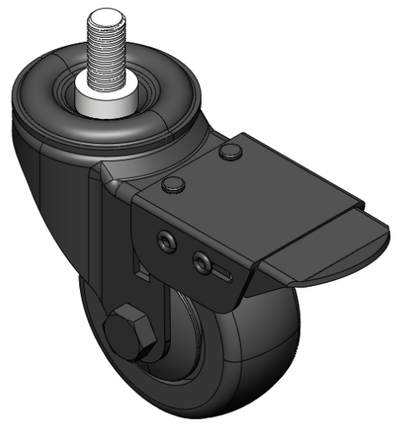

Picture may differ from original product

Technical Data

◉ Imperial ○ Metric

Wheel Diameter	3 "
Wheel Width	1-1/4 "
Wheel Bearing	Wheels With Ball Bearings
Threaded Stem	M12-P1.75
Threaded Size	1 "
Offset	1-1/2 "
Swivel Interference	9-1/8 "
Overall Height	4-1/16 "
Swivel Radius	4-9/16 "
Hardness Of Tread	82±5° Shore A
Load Capacity (Dynamic)	198lbs
Load Capacity (Static)	298lbs
Temperature	-4°F to +140°F
Fork Type	Swivel Caster With Total Brake
Stainless	N/A
Electrical Conductivity	N/A
Anti-Static	N/A
Weight	1.5lbs
Standard	ISO22883

Advantages at a glance

Rolling Resistance	● ● ● ● ○
Operating Noise	● ● ● ● ○
Floor Surface Preservation	● ● ● ● ●

Dimensions

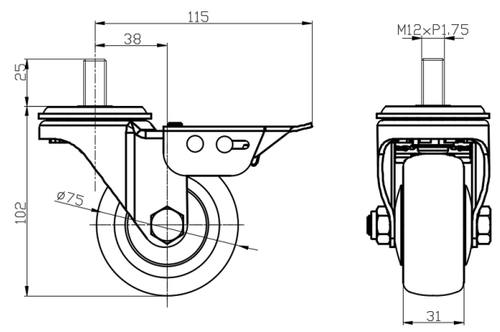

Mounting

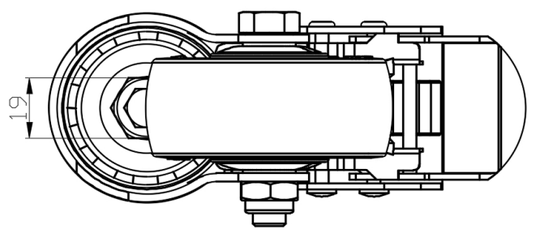

* For any deviation between metric and imperial spec, please refer to the metric spec.

© Copyright 2025 DershengInternational www.dersheng.com