Product Data Sheet

1139 Medium Duty General Purposes Caster Series

PU (red flat) Wheel Diameter x Wheel Width 75 × 32mm

EAN

YJ-11390300332013

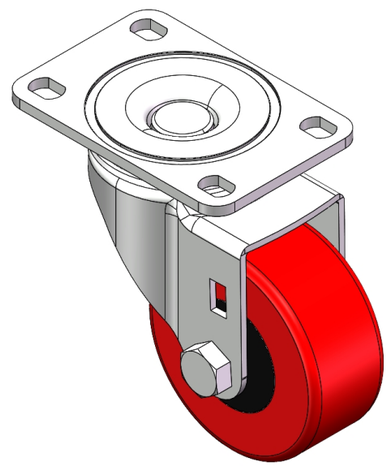

Picture may differ from original product

Swivel Caster with Riveted Fork and Stamping Fork - 75 x 45 mm (3" x 1-3/4") Bolt Hole Spacing
Zine-Plated, Top Plateed (4T) Mounting Type system
Cast Iron core, High Quality Polyurethane Wheel Tread
Red, Bearing - Ball Bearings.

Wheel tread: Made of high-quality polyurethane

Wheel Center: cast iron core

Drawings are for reference only and may differ from the product

Technical Data

◉ Metric ○ Imperial

Wheel Diameter	75mm
Wheel Width	32mm
Wheel Bearing	Wheels With Ball Bearings
Plate Size	95 x 65mm
Bolt Hole Spacing	75 x 45mm
Plate Hole	12 x 9mm
Offset	38mm
Swivel Interference	156mm
Overall Height	105.5mm
Swivel Radius	78mm
Hardness Of Tread	93±5° Shore A
Load Capacity (Dynamic)	90kgs
Load Capacity (Static)	135kgs
Temperature	-20°C to +70°C
Fork Type	Swivel Caster
Stainless	N/A
Electrical Conductivity	N/A
Anti-Static	N/A
Weight	1.08kgs
Standard	ISO22883

Advantages at a glance

Rolling Resistance	● ● ● ○ ○
Operating Noise	● ● ● ● ○
Floor Surface Preservation	● ● ● ● ○

Dimensions

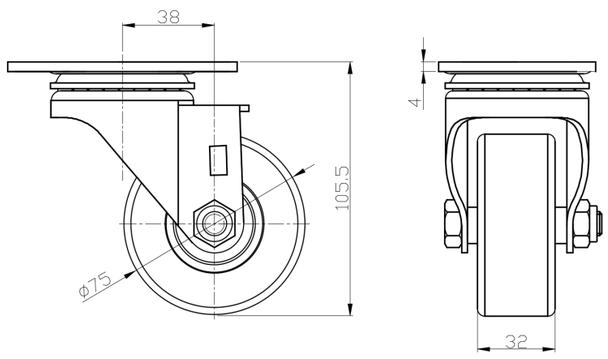

Mounting

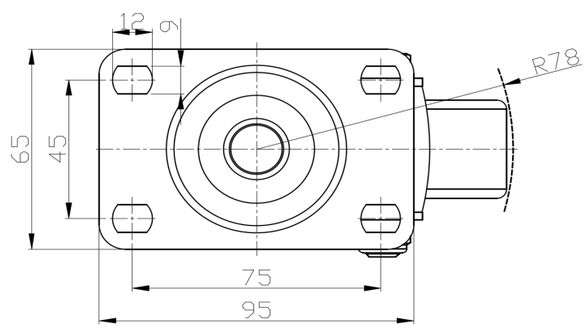

* For any deviation between metric and imperial spec, please refer to the metric spec.

© Copyright 2025 DershengInternational www.dersheng.com