Product Data Sheet

1139 Medium Duty General Purposes Caster Series

PU (red flat) Wheel Diameter x Wheel Width 75 × 32mm

EAN

YJ-11390300334013

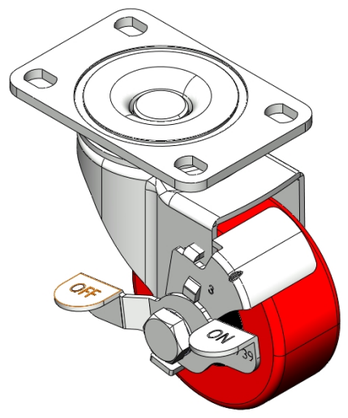

Picture may differ from original product

Castors with Side Brake and Locking system. Top Plate Riveted Stamping Fork - 75 x 45 mm (3" x 1-3/4") Bolt Hole Spacing Extended control lever surface, Top Plate (4T) installation device Cast Iron Wheel Center, high quality polyurethane wheel tread Iron red, Bearing—Ball Bearing.

Wheel tread: Made of high quality polyurethane

Wheel Center: cast iron core

Drawings are for reference only and may differ from the product

Technical Data

◉ Imperial ○ Metric

Wheel Diameter	3 "
Wheel Width	1-5/16 "
Wheel Bearing	Wheels With Ball Bearings
Plate Size	3-13/16 " x 2-9/16 "
Bolt Hole Spacing	3 " x 1-13/16 "
Plate Hole	9/16 " x 23/64 "
Offset	1-1/2 "
Swivel Interference	6-3/8 "
Overall Height	7-1/2 "
Swivel Radius	2-7/16 "
Hardness Of Tread	93±5° Shore A
Load Capacity (Dynamic)	198lbs
Load Capacity (Static)	298lbs
Temperature	-4°F to +158°F
Fork Type	Swivel Caster With Side Brake
Stainless	N/A
Electrical Conductivity	N/A
Anti-Static	N/A
Weight	2.6lbs
Standard	ISO22883

Advantages at a glance

Rolling Resistance	● ● ● ○ ○
Operating Noise	● ● ● ● ○
Floor Surface Preservation	● ● ● ● ○

Dimensions

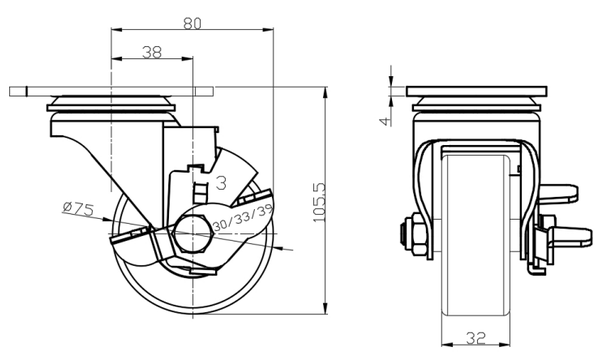

Mounting

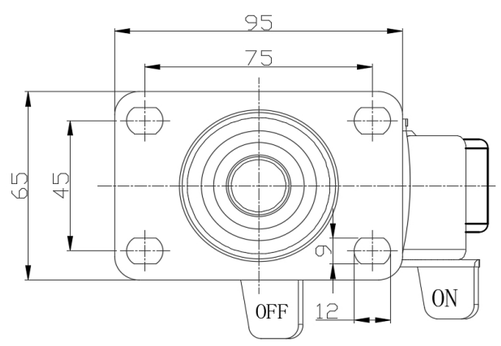

* For any deviation between metric and imperial spec, please refer to the metric spec.

© Copyright 2025 DershengInternational www.dersheng.com