Product Data Sheet

1139 Medium Duty General Purposes Caster Series

WCPD (White) Wheel Diameter × Wheel Width 75 x 31mm

EAN

YJ-11390300444013

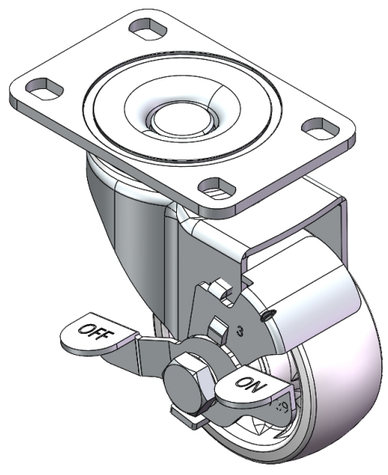

Picture may differ from original product

Casters with Side Brakes and With locking system. Top Plate with Riveted, Fork—75 x 45 mm (3" x 1-3/4") Bolt Hole Spacing.
Zine-Plated, Top Plate (4T) Mounting Type system.
Polypropylene Wheel Center and Wheel Tread.
White, Bearing—Ball Bearings.

Wheel tread:PP polypropylene

Wheel Center: PP polypropylene

Drawings are for reference only and may differ from the product

Technical Data

◉ Metric ○ Imperial

Wheel Diameter	75mm
Wheel Width	31mm
Wheel Bearing	Wheels With Ball Bearings
Plate Size	95 x 65mm
Bolt Hole Spacing	75 x 45mm
Plate Hole	12 x 9mm
Offset	38mm
Swivel Interference	160mm
Overall Height	105.5mm
Swivel Radius	80mm
Hardness Of Tread	72±5° Shore D
Load Capacity (Dynamic)	100kgs
Load Capacity (Static)	150kgs
Temperature	-12°C to +60°C
Fork Type	Swivel Caster With Side Brake
Stainless	N/A
Electrical Conductivity	N/A
Anti-Static	N/A
Weight	0.72kgs
Standard	ISO22883

Advantages at a glance

Rolling Resistance	● ● ● ● ●
Operating Noise	● ● ● ○ ○
Floor Surface Preservation	● ● ● ○ ○

Dimensions

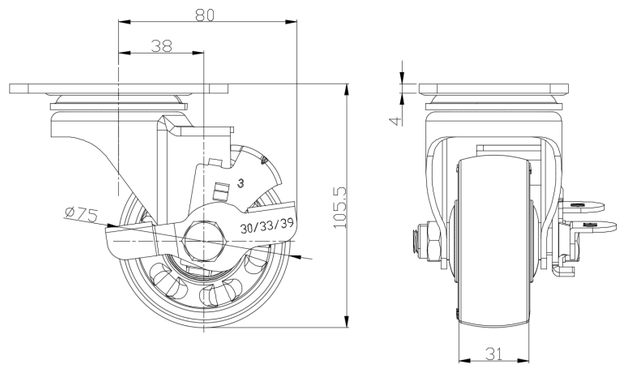

Mounting

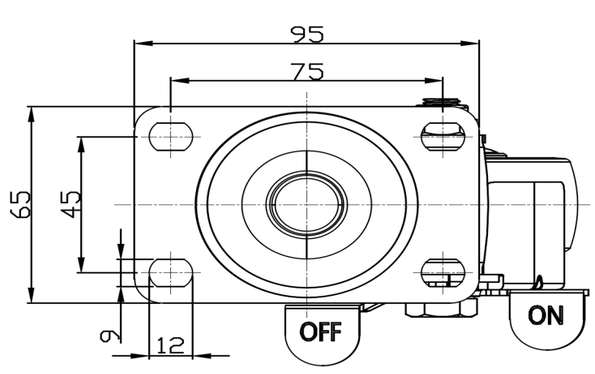

* For any deviation between metric and imperial spec, please refer to the metric spec.

© Copyright 2025 DershengInternational www.dersheng.com