Product Data Sheet

1139-1 Series — Medium Duty General Purposes Caster (American Style)

W Resolute (Pearlescent dark gray) Wheel Diameter × Wheel Width 75 x 31mm

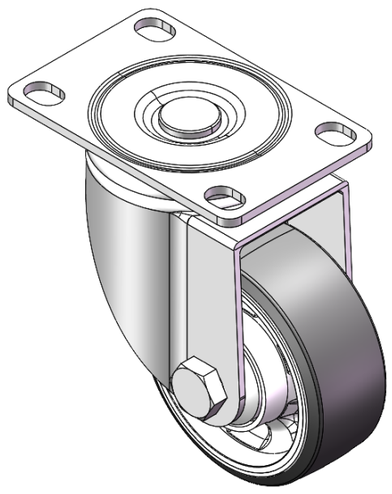

Picture may differ from original product

YJ-11390300452073

Swivel Caster with Riveted Fork and Stamping Fork—75 x 45 mm (3" x 1-3/4") Bolt Hole Spacing
Zine-Plated, Mounting Type - Top Plate
Reinforced, impact-resistant polypropylene core with High-Quality Reinforced Polypropylene Rubber (TPR) Wheel Tread
Pearl-finish dark gray, Bearing—Ball Bearings.

Wheel tread: Thermoplastic rubber elastomer (TPR)

Wheel Center: Made of high-quality impact-resistant polypropylene

Drawings are for reference only and may differ from the product

Technical Data

◉ Metric ○ Imperial

Wheel Diameter	75mm
Wheel Width	31mm
Wheel Bearing	Wheels With Ball Bearings
Plate Size	93 x 61mm
Bolt Hole Spacing	73.5 x 45mm
Plate Hole	12.9 x 9.5mm
Offset	30mm
Swivel Interference	136mm
Overall Height	106mm
Swivel Radius	68mm
Hardness Of Tread	72±5° Shore A
Load Capacity (Dynamic)	110kgs
Load Capacity (Static)	165kgs
Temperature	-20°C to +60°C
Fork Type	Swivel Caster
Stainless	N/A
Electrical Conductivity	N/A
Anti-Static	N/A
Weight	0.58kgs
Standard	ISO22883

Advantages at a glance

Rolling Resistance	● ● ● ● ●
Operating Noise	● ● ● ● ●
Floor Surface Preservation	● ● ● ● ●

Dimensions

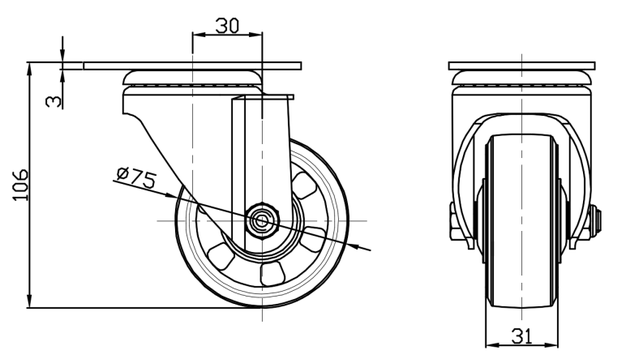

Mounting

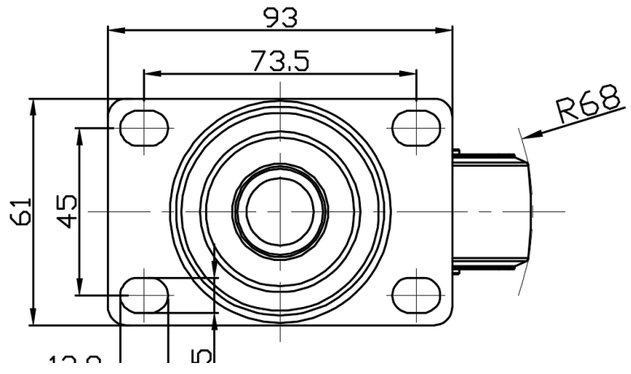

Drawings are for reference only and may differ from the product.

* For any deviation between metric and imperial spec, please refer to the metric spec.

© Copyright 2025 DershengInternational www.dersheng.com