Product Data Sheet

1139 Medium Duty General Purposes Caster Series

W Resolute (Pearlescent dark gray) Wheel Diameter × Wheel Width 75 x 31mm

EAN

YJ-11390300454023

Total Brake locking system. Top Plate with Riveted, Stamping Fork and 75 x 45 mm (3" x 1-3/4") Bolt Hole Spacing.
Zine-Plated, Top Plate (4T) Mounting Type system.
Reinforced, impact-resistant polypropylene Wheel Center with High-Quality Reinforced Polypropylene Rubber (TPR) Wheel Tread.
Pearl-gray finish, Bearing with Ball Bearings.

Wheel tread: Thermoplastic rubber elastomer (TPR)

Wheel Center: Made of high-quality impact-resistant polypropylene

Drawings are for reference only and may differ from the product

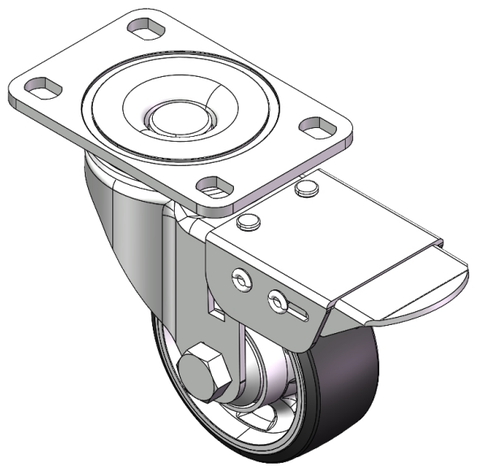

Picture may differ from original product

Technical Data

◉ Metric ○ Imperial

Wheel Diameter	75mm
Wheel Width	31mm
Wheel Bearing	Wheels With Ball Bearings
Plate Size	95 x 65mm
Bolt Hole Spacing	75 x 45mm
Plate Hole	12 x 9mm
Offset	38mm
Swivel Interference	230mm
Overall Height	105.5mm
Swivel Radius	115mm
Hardness Of Tread	72±5° Shore A
Load Capacity (Dynamic)	110kgs
Load Capacity (Static)	165kgs
Temperature	-20°C to +60°C
Fork Type	Swivel Caster With Total Brake
Stainless	N/A
Electrical Conductivity	N/A
Anti-Static	N/A
Weight	0.79kgs
Standard	ISO22883

Advantages at a glance

Rolling Resistance	● ● ● ● ●
Operating Noise	● ● ● ● ●
Floor Surface Preservation	● ● ● ● ●

Dimensions

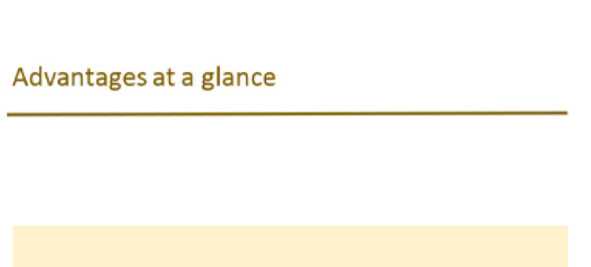

Mounting

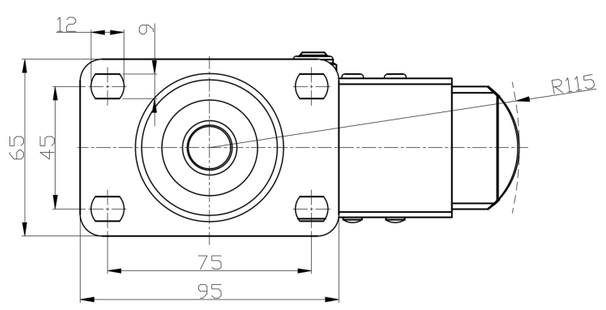

* For any deviation between metric and imperial spec, please refer to the metric spec.

© Copyright 2025 DershengInternational www.dersheng.com