Product Data Sheet

# 1139 Medium Duty General Purposes Caster Series

AQPU (Blue round) Wheel Diameter × wWheel Width 75 x 30mm

EAN

YJ-11390300604083

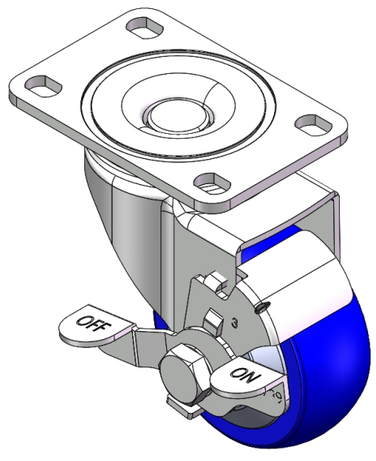


Picture may differ from original product

Casters with Side Brakes and With locking system. Top Plate Riveted and Fork – 75 x 45 mm (3" x 1-3/4") Bolt Hole Spacing.
Zine-Plated, Top Plate (4T) Mounting Type system.
Aluminum core, High Quality Polyurethane Wheel Tread.
Blue color, Bearing – Ball Bearings.

Wheel tread: Made of high-quality polyurethane

Wheel Center: aluminum core

Drawings are for reference only and may differ from the product

## Technical Data

◉ Metric ○ Imperial

| | |
|---|---|
| Wheel Diameter | 75mm |
| Wheel Width | 30mm |
| Wheel Bearing | Wheels With Ball Bearings |
| Plate Size | 95 x 65mm |
| Bolt Hole Spacing | 75 x 45mm |
| Plate Hole | 12 x 9mm |
| Offset | 38mm |
| Swivel Interference | 160mm |
| Overall Height | 105.5mm |
| Swivel Radius | 80mm |
| Hardness Of Tread | 87±5° Shore A |
| Load Capacity (Dynamic) | 160kgs |
| Load Capacity (Static) | 240kgs |
| Temperature | -20°C to +70°C |
| Fork Type | Swivel Caster With Side Brake |
| Stainless | N/A |
| Electrical Conductivity | N/A |
| Anti-Static | N/A |
| Weight | 0.86kgs |
| Standard | ISO22883 |

## Advantages at a glance

| | |
|---|---|
| Rolling Resistance | ● ● ● ● ● |
| Operating Noise | ● ● ● ● ● |
| Floor Surface Preservation | ● ● ● ● ● |

## Dimensions

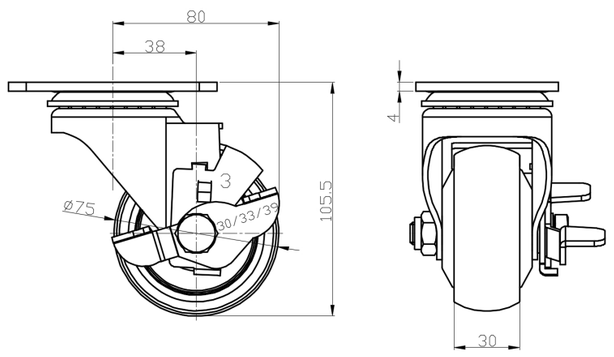


## Mounting

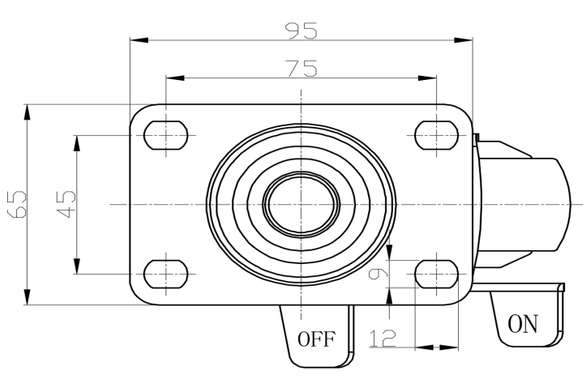


* For any deviation between metric and imperial spec, please refer to the metric spec.

© Copyright 2025 DershengInternational www.dersheng.com