Product Data Sheet

# 1139 Medium Duty General Purposes Caster Series

PPR (Pearlescent dark gray) Wheel Diameter × Wheel Width 100 x 31mm

EAN

YJ-11390400265013

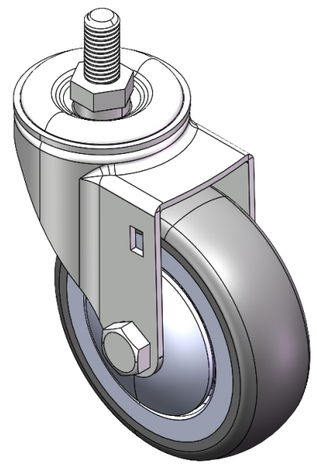

Picture may differ from original product

Swivel Caster, thread-Riveted Stamping Fork—M12-P1.75
Zine-Plated, Mounting Type - Threaded Stem
High-Quality Impact-Resistant Polypropylene core, High-Quality Reinforced Polypropylene Rubber (TPR) Wheel Tread
Pearl-gray finish, Ball Bearings.

Wheel tread: Thermoplastic rubber elastomer (TPR)
Wheel Center: Made of high-quality impact-resistant polypropylene

Drawings are for reference only and may differ from the product

## Technical Data

◉ Imperial ○ Metric

| | |
|---|---|
| Wheel Diameter | 4 " |
| Wheel Width | 1-1/4 " |
| Wheel Bearing | Wheels With Ball Bearings |
| Threaded Stem | M12-P1.75 |
| Threaded Size | 1 " |
| Offset | 1-1/2 " |
| Swivel Interference | 7 " |
| Overall Height | 5-3/16 " |
| Swivel Radius | 3-1/2 " |
| Hardness Of Tread | 82±5° Shore A |
| Load Capacity (Dynamic) | 220lbs |
| Load Capacity (Static) | 331lbs |
| Temperature | -4°F to +140°F |
| Fork Type | Swivel Caster |
| Stainless | N/A |
| Electrical Conductivity | N/A |
| Anti-Static | N/A |
| Weight | 1.3lbs |
| Standard | ISO22883 |

## Advantages at a glance

| | |
|---|---|
| Rolling Resistance | ● ● ● ● ○ |
| Operating Noise | ● ● ● ● ○ |
| Floor Surface Preservation | ● ● ● ● ● |

## Dimensions

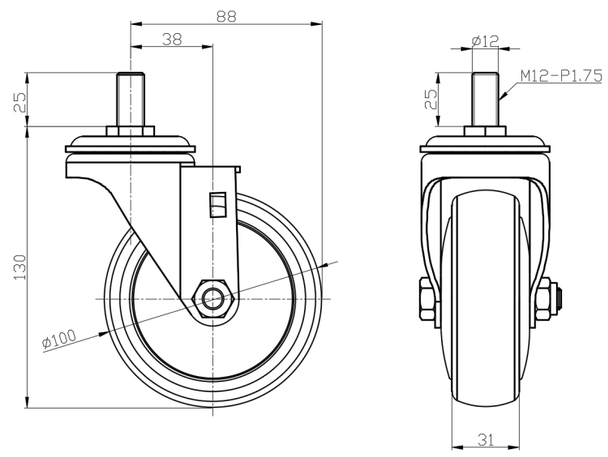


## Mounting

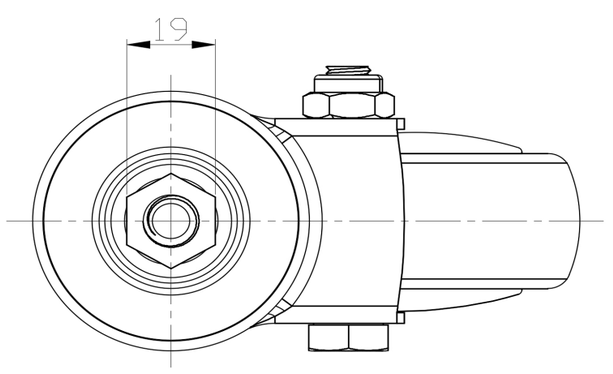


* For any deviation between metric and imperial spec, please refer to the metric spec.

© Copyright 2025 DershengInternational www.dersheng.com