Product Data Sheet

1139 Medium Duty General Purposes Caster Series

WCPD (White) Wheel Diameter × Wheel Width 100 x 31mm

EAN

YJ-11390400441013

Rigid Caster, Stamping Fabricated Caster Fork with 75 x 45 mm (3" x 1-3/4") Bolt Hole Spacing
Zine-Plated, Mounting Type - Top Plate
Polypropylene Wheel Center and Wheel Tread
White, Bearing with Ball Bearings

Wheel surface: PP polypropylene

Wheel Center: PP polypropylene

Drawings are for reference only and may differ from the product

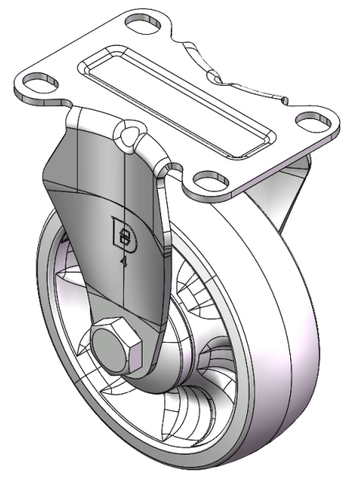

Picture may differ from original product

Technical Data

◉ Metric ○ Imperial

Wheel Diameter	100mm
Wheel Width	31mm
Wheel Bearing	Wheels With Ball Bearings
Plate Size	92 x 62mm
Bolt Hole Spacing	75 x 45mm
Plate Hole	12 x 9mm
Overall Height	130mm
Hardness Of Tread	72±5° Shore D
Load Capacity (Dynamic)	160kgs
Load Capacity (Static)	240kgs
Temperature	-12°C to +60°C
Fork Type	Rigid Caster
Stainless	N/A
Electrical Conductivity	N/A
Anti-Static	N/A
Weight	0.45kgs
Standard	ISO22883

Advantages at a glance

Rolling Resistance	● ● ● ● ●
Operating Noise	● ● ● ○ ○
Floor Surface Preservation	● ● ● ○ ○

Dimensions

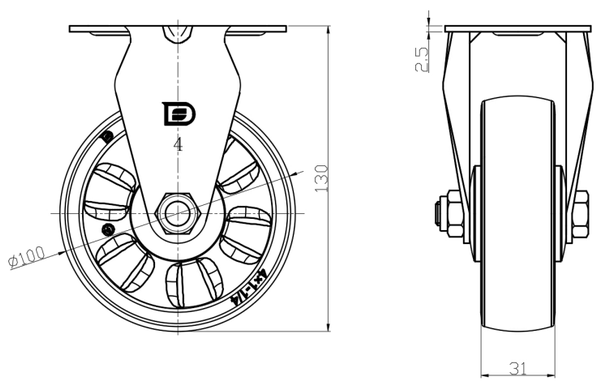

Mounting

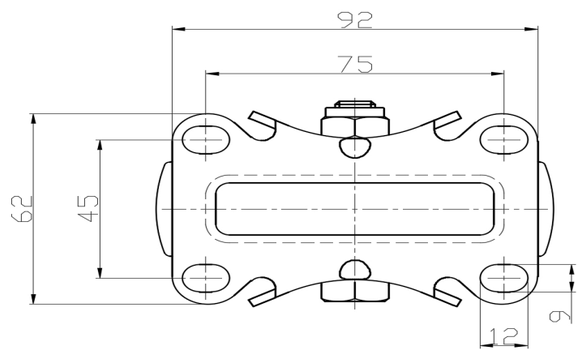

* For any deviation between metric and imperial spec, please refer to the metric spec.

© Copyright 2025 DershengInternational www.dersheng.com