Product Data Sheet

1139 Medium Duty General Purposes Caster Series

W Resolute(Pearlescent dark gray) Wheel Diameter × Wheel Width 100 x 31mm

EAN

YJ-11390400455013

Swivel Caster, thread-Riveted Stamping Fork—M12-P1.75
Zine-Plated, Mounting Type - Threaded Stem
Reinforced impact-resistant polypropylene core, High-Quality Reinforced Polypropylene Rubber (TPR) Wheel Tread
Pearl-gray finish, Ball Bearings.

Wheel tread: Thermoplastic rubber elastomer (TPR)

Wheel Center: Made of high-quality impact-resistant polypropylene

Drawings are for reference only and may differ from the product

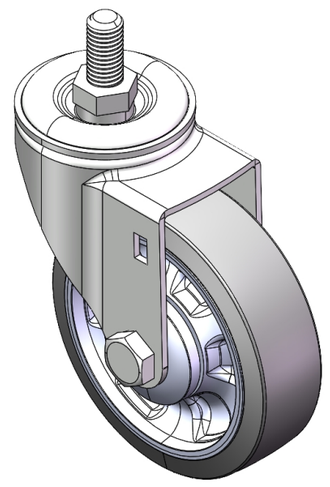

Picture may differ from original product

Technical Data

◉ Metric ○ Imperial

Wheel Diameter	100mm
Wheel Width	31mm
Wheel Bearing	Wheels With Ball Bearings
Threaded Stem	M12-P1.75
Threaded Size	25mm
Offset	38mm
Swivel Interference	176mm
Overall Height	130mm
Swivel Radius	88mm
Hardness Of Tread	72±5° Shore A
Load Capacity (Dynamic)	135kgs
Load Capacity (Static)	202.5kgs
Temperature	-20°C to +60°C
Fork Type	Swivel Caster
Stainless	N/A
Electrical Conductivity	N/A
Anti-Static	N/A
Weight	0.63kgs
Standard	ISO22883

Advantages at a glance

Rolling Resistance	● ● ● ● ●
Operating Noise	● ● ● ● ●
Floor Surface Preservation	● ● ● ● ●

Dimensions

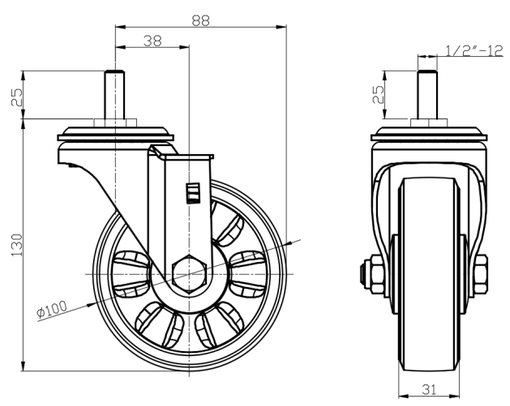

Mounting

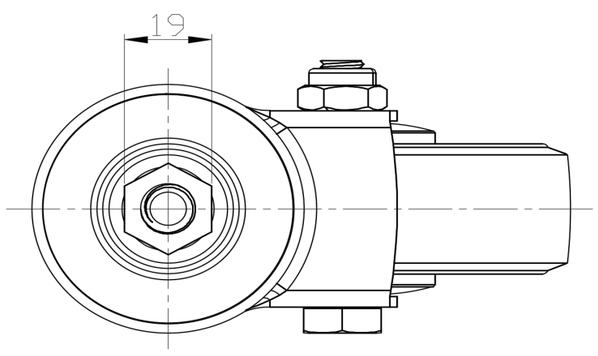

* For any deviation between metric and imperial spec, please refer to the metric spec.

© Copyright 2025 DershengInternational www.dersheng.com