Product Data Sheet

1139 Medium Duty General Purposes Caster Series

AQPU (brown round) Wheel Diameter × Wheel Width 100 x 31mm

EAN

YJ-11390400601033

Rigid Caster with Stamping Fabricated Caster Fork and 75 x 45 mm (3" x 1-3/4") Bolt Hole Spacing.
Zine-Plated, Mounting Type - Top Plate.
Aluminum core, High Quality Polyurethane Wheel Tread.
Brown color, Bearing—Ball Bearings.

Wheel tread: Made of high-quality polyurethane
Wheel Center: aluminum core

Drawings are for reference only and may differ from the product

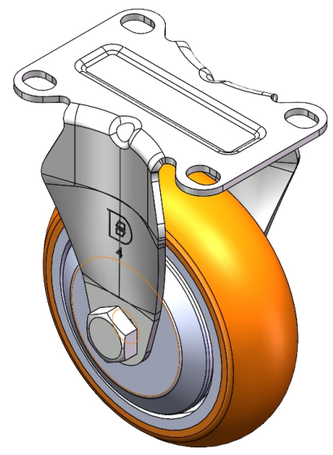

Picture may differ from original product

Technical Data

◉ Metric ○ Imperial

Wheel Diameter	100mm
Wheel Width	31mm
Wheel Bearing	Wheels With Ball Bearings
Plate Size	92 x 62mm
Bolt Hole Spacing	75 x 45mm
Plate Hole	12 x 9mm
Overall Height	130mm
Hardness Of Tread	92±5° Shore A
Load Capacity (Dynamic)	200kgs
Load Capacity (Static)	300kgs
Temperature	-20°C to +70°C
Fork Type	Rigid Caster
Stainless	N/A
Electrical Conductivity	N/A
Anti-Static	N/A
Weight	0.64kgs
Standard	ISO22883

Advantages at a glance

Rolling Resistance	● ● ● ● ●
Operating Noise	● ● ● ● ●
Floor Surface Preservation	● ● ● ● ●

Dimensions

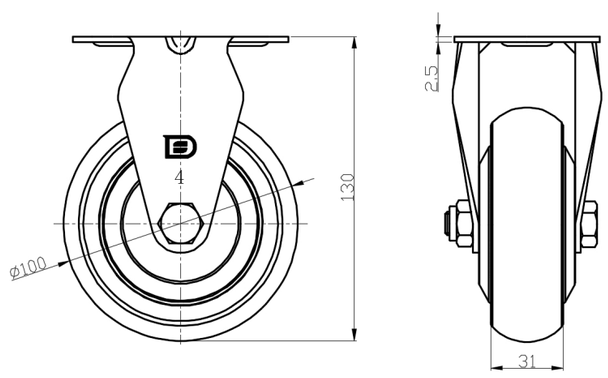

Mounting

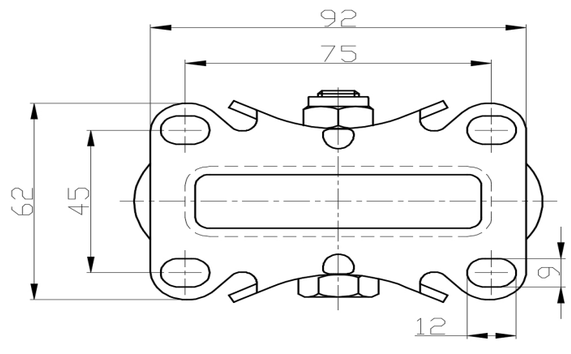

* For any deviation between metric and imperial spec, please refer to the metric spec.

© Copyright 2025 DershengInternational www.dersheng.com