Product Data Sheet

1139 Medium Duty General Purposes Caster Series

AQPU (blue round) Wheel Diameter × Wheel Width 100 x 31mm

EAN

YJ-11390400604073

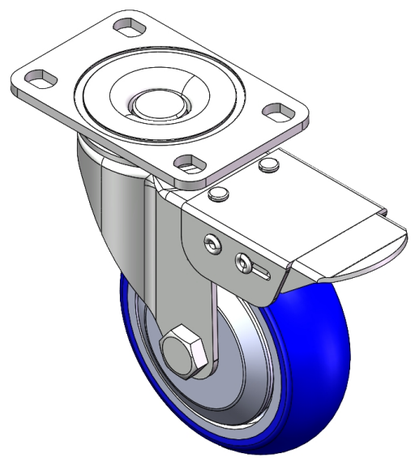

Picture may differ from original product

Swivel Caster with Riveted Fork and Stamping Fork—75 x 45 mm (3" x 1-3/4") Bolt Hole Spacing
Zine-Plated, Top Plate (4T) Mounting Type system
Aluminum core, High Quality Polyurethane Wheel Tread
Blue color, Bearing—Ball Bearings.

Wheel tread: Made of high-quality polyurethane
Wheel Center: aluminum core

Drawings are for reference only and may differ from the product

Technical Data

◉ Imperial ○ Metric

Wheel Diameter	4 "
Wheel Width	1-1/4 "
Wheel Bearing	Wheels With Ball Bearings
Plate Size	3-13/16 " x 2-9/16 "
Bolt Hole Spacing	3 " x 1-13/16 "
Plate Hole	1/2 " x 23/64 "
Offset	1-1/2 "
Swivel Interference	9-1/8 "
Overall Height	5-3/16 "
Swivel Radius	4-9/16 "
Hardness Of Tread	87±5° Shore A
Load Capacity (Dynamic)	441lbs
Load Capacity (Static)	661lbs
Temperature	-4°F to +158°F
Fork Type	Swivel Caster With Total Brake
Stainless	N/A
Electrical Conductivity	N/A
Anti-Static	N/A
Weight	2.3lbs
Standard	ISO22883

Advantages at a glance

Rolling Resistance	● ● ● ● ●
Operating Noise	● ● ● ● ●
Floor Surface Preservation	● ● ● ● ●

Dimensions

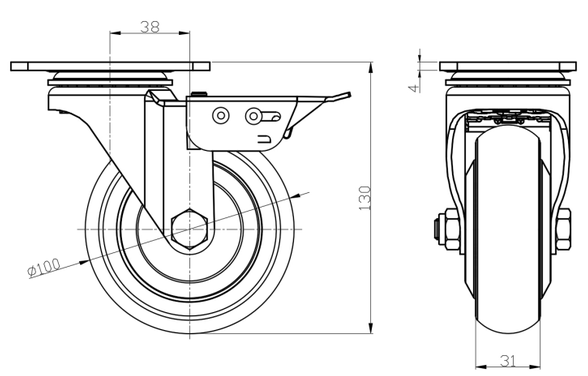

Mounting

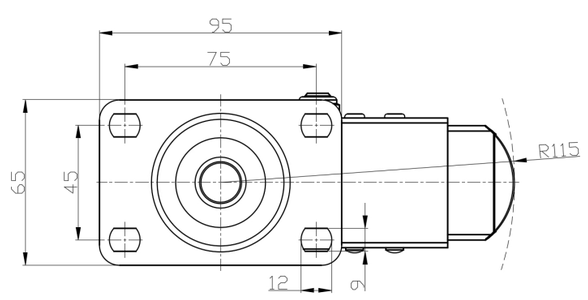

* For any deviation between metric and imperial spec, please refer to the metric spec.

© Copyright 2025 DershengInternational www.dersheng.com