Product Data Sheet

1139 Medium Duty General Purposes Caster Series

AQPU (grey round) Wheel Diameter × Wheel Width 125 x 31mm

EAN

YJ-11390500604073

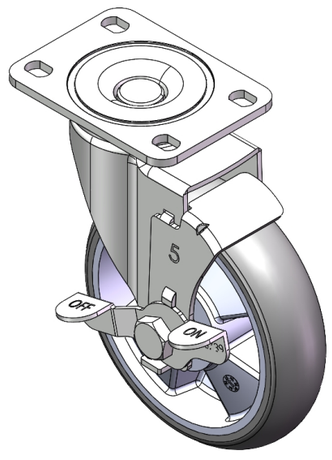

Picture may differ from original product

Casters with Side Brakes and With locking system. Top Plate Riveted and Fork – 75 x 45 mm (3" x 1-3/4") Bolt Hole Spacing.
Zine-Plated, Top Plate (4T) Mounting Type system.
Aluminum core, High Quality Polyurethane Wheel Tread.
Gray. Bearings – Ball Bearings.

Wheel tread: Made of high-quality polyurethane

Wheel Center: aluminum core

Drawings are for reference only and may differ from the product

Technical Data

◉ Metric ○ Imperial

Wheel Diameter	125mm
Wheel Width	31mm
Wheel Bearing	Wheels With Ball Bearings
Plate Size	95 x 65mm
Bolt Hole Spacing	75 x 45mm
Plate Hole	12 x 9mm
Offset	38mm
Swivel Interference	202mm
Overall Height	158mm
Swivel Radius	101mm
Hardness Of Tread	77±5° Shore A
Load Capacity (Dynamic)	230kgs
Load Capacity (Static)	345kgs
Temperature	-20°C to +70°C
Fork Type	Swivel Caster With Side Brake
Stainless	N/A
Electrical Conductivity	N/A
Anti-Static	N/A
Weight	1.16kgs
Standard	ISO22883

Advantages at a glance

Rolling Resistance	● ● ● ● ●
Operating Noise	● ● ● ● ●
Floor Surface Preservation	● ● ● ● ●

Dimensions

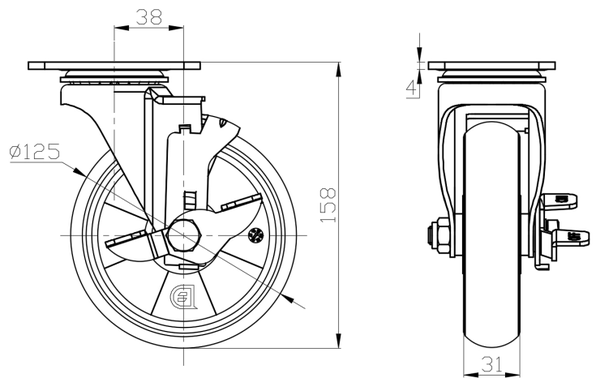

Mounting

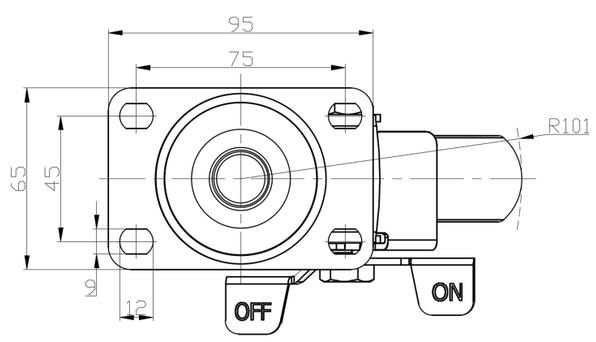

* For any deviation between metric and imperial spec, please refer to the metric spec.

© Copyright 2025 DershengInternational www.dersheng.com