Product Information Sheet

1148 48 48 Series Central Locking Caster Series (All Plastic)

Resolute Rubber wheel (White dark gray) Wheel Diameter x Wheel Width 125 x 15mm

EAN

YJ-11480500458070

Central lockinging with hexagonal cam control on short lever, Total Brake Caster. Single Bolthole engagement. Stamping Fork.
Polyamide wheel Fork—white, hollow Mounting Type device.
High-Quality Impact-Resistant Polypropylene Wheel Center, High-Quality Reinforced Polypropylene Rubber (TPR) Wheel Tread.
White/dark gray, Bearing—Ball Bearings.

Wheel tread: Thermoplastic rubber elastomer (TPR)

Wheel Center: Made of high-quality impact-resistant polypropylene

Drawings are for reference only and may differ from the product

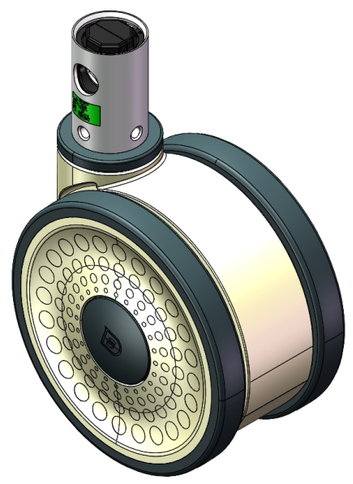

Picture may differ from original product

Technical Data

◉ Imperial ○ Metric

Wheel Diameter	5 "
Wheel Width	2-15/16
Wheel Bearing	Wheels With Ball Bearings
Stem Diameter	1-5/16 "
Stem Length	2 "
Offset	1-5/8 "
Swivel Interference	8-9/16 "
Overall Height	5-3/16 "
Swivel Radius	4-5/16 "
Hardness Of Tread	72±5° Shore A
Load Capacity (Dynamic)	331lbs
Load Capacity (Static)	496lbs
Temperature	-4°F to +140°F
Fork Type	Swivel Caster With Total Brake
Stainless	N/A
Electrical Conductivity	N/A
Anti-Static	N/A
Weight	2.3lbs
Standard	ISO22881

Advantages at a glance

Rolling Resistance	● ● ● ● ●
Operating Noise	● ● ● ● ●
Floor Surface Preservation	● ● ● ● ●

Dimensions

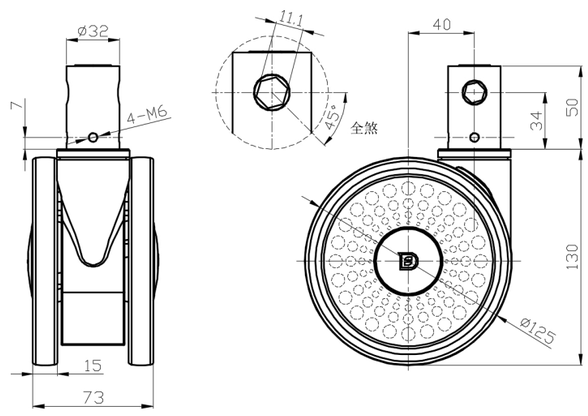

Mounting

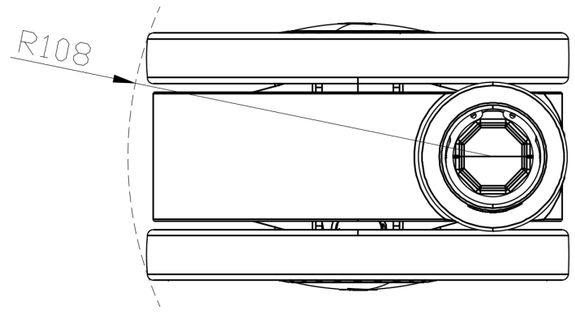

* For any deviation between metric and imperial spec, please refer to the metric spec.

© Copyright 2025 DershengInternational www.dersheng.com