Product Data Sheet

1151D Heavy Duty 1.5" Wide General Purposes Caster Series

W Resolute (black, dark gray) Wheel Diameter × Wheel Width 100 x 36mm

EAN

YJ-11510400454043

Total Brake locking system. Top Plate with Riveted, Stamping Fork and 85 x 70mm (3-3/8" x 2-3/4") Bolt Hole Spacings.
Zine-Plated, Top Plate (4T) Mounting Type system.
Reinforced, impact-resistant polypropylene Wheel Center with High-Quality Reinforced Polypropylene Rubber (TPR) Wheel Tread.
Dark gray finish, Bearing with Ball Bearings.

Wheel tread: Thermoplastic rubber elastomer (TPR)

Wheel Center: Made of high-quality impact-resistant polypropylene

Drawings are for reference only and may differ from the product

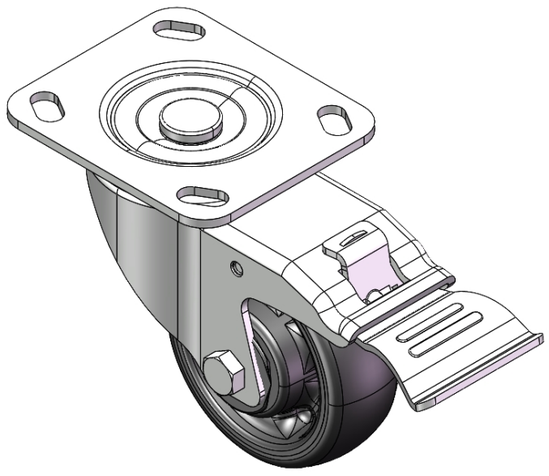

Picture may differ from original product

Technical Data

◉ Imperial ○ Metric

Wheel Diameter	4 "
Wheel Width	1-7/16 "
Wheel Bearing	Wheels With Ball Bearings
Plate Size	4-9/16 " x 4 "
Bolt Hole Spacing	3-7/16 " x 2-13/16 "
Plate Hole	13/16 " x 3/8 "
Offset	2 "
Swivel Interference	13 "
Overall Height	5-3/16 "
Swivel Radius	6-1/2 "
Hardness Of Tread	72±5° Shore A
Load Capacity (Dynamic)	309lbs
Load Capacity (Static)	463lbs
Temperature	-4°F to +140°F
Fork Type	Swivel Caster
Stainless	N/A
Electrical Conductivity	N/A
Anti-Static	N/A
Weight	3.2lbs
Standard	ISO22883

Advantages at a glance

Rolling Resistance	● ● ● ● ●
Operating Noise	● ● ● ● ●
Floor Surface Preservation	● ● ● ● ●

Dimensions

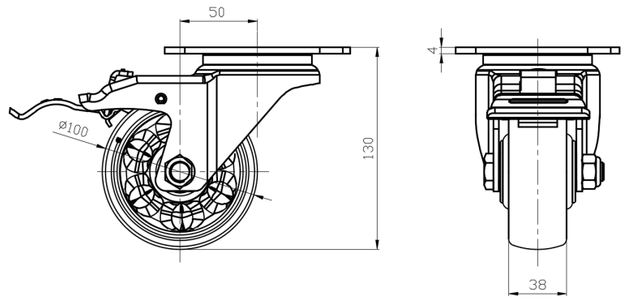

Mounting

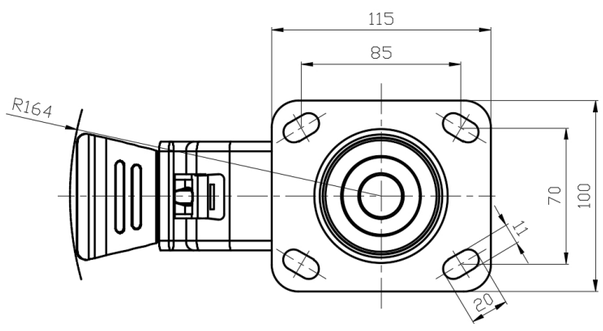

* For any deviation between metric and imperial spec, please refer to the metric spec.

© Copyright 2025 DershengInternational www.dersheng.com