Product Data Sheet

1165-6 AMR/AGV- 6 Pressed Steel Caster - Dual Wheel Series (Medium/Light Duty)

AQPU wheel (Brown arc) wheel diameter × wheel width 100 x 40mm

EAN

YJ-11510400601913

Rigid Caster with Stamping Fabricated Caster Fork and 75 x 45 mm (3" x 1-3/4") Bolt Hole Spacing.
Zine-Plated, Mounting Type - Top Plate.
Aluminum core, High Quality Polyurethane Wheel Tread.
Brown color, Bearing—Ball Bearings.

Wheel tread: Made of high-quality polyurethane

Wheel Center: aluminum core

Drawings are for reference only and may differ from the product

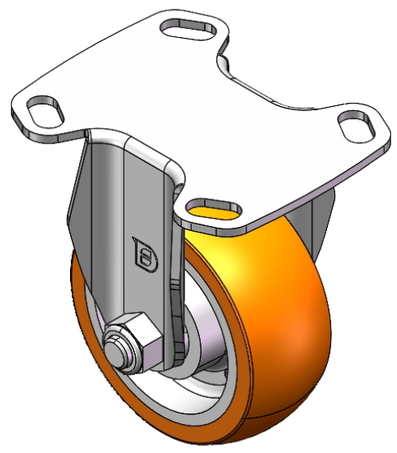

Picture may differ from original product

Technical Data

◉ Imperial ○ Metric

Wheel Diameter	4 "
Wheel Width	1-5/8 "
Wheel Bearing	Wheels With Ball Bearings
Plate Size	4-11/16 " x 3-13/16 "
Bolt Hole Spacing	3-7/16 " x 2-13/16 "
Plate Hole	13/16 " x 3/8 "
Overall Height	5-3/16 "
Hardness Of Tread	92±5° Shore A
Load Capacity (Dynamic)	441lbs
Load Capacity (Static)	661lbs
Temperature	-4°F to +158°F
Fork Type	Rigid Caster
Stainless	N/A
Electrical Conductivity	N/A
Anti-Static	N/A
Weight	2.8lbs
Standard	ISO22883

Advantages at a glance

Rolling Resistance	● ● ● ● ●
Operating Noise	● ● ● ● ●
Floor Surface Preservation	● ● ● ● ●

Dimensions

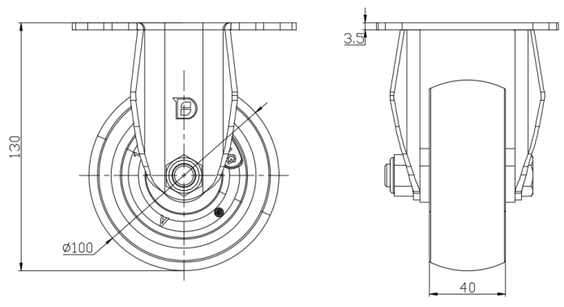

Mounting

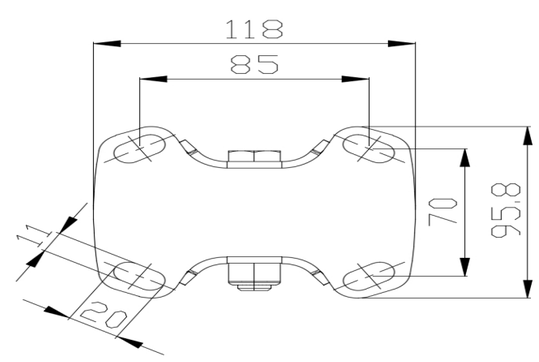

* For any deviation between metric and imperial spec, please refer to the metric spec.

© Copyright 2025 DershengInternational www.dersheng.com