Product Data Sheet

1151D Heavy Duty 1.5" Wide General Purposes Caster Series

AQPU (brown round) Wheel Diameter × Wheel Width 100 x 40mm

EAN

YJ-11510400602083

Swivel Caster, Top Plate Riveted Stamping Fork - high-grade hole Surface Zine-Plated, Top Plate type (4T) Mounting Type device Aluminum core, High Quality Polyurethane Wheel Tread Brown, Bearing - Ball Bearing.

Wheel tread: Made of high quality polyurethane

Wheel Center: Aluminum core

Drawings are for reference only and may differ from the product

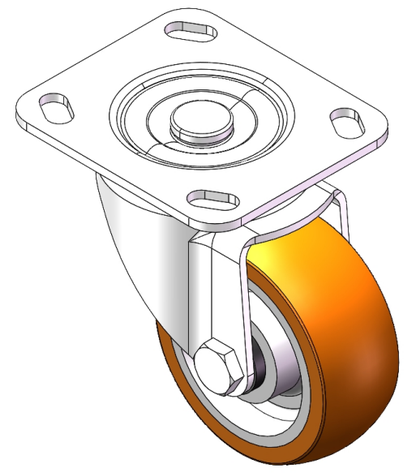

Picture may differ from original product

Technical Data

◉ Imperial ○ Metric

Wheel Diameter	4 "
Wheel Width	1-5/8 "
Wheel Bearing	Wheels With Ball Bearings
Plate Size	4-9/16 " x 4 "
Bolt Hole Spacing	3-3/8 " x 2-3/4 "
Plate Hole	13/16 " x 3/8 "
Offset	1-5/8 "
Swivel Interference	7-1/8 "
Overall Height	5-3/16 "
Swivel Radius	3-9/16 "
Hardness Of Tread	92±5° Shore A
Load Capacity (Dynamic)	441lbs
Load Capacity (Static)	661lbs
Temperature	-4°F to +158°F
Fork Type	Swivel Caster
Stainless	N/A
Electrical Conductivity	N/A
Anti-Static	N/A
Weight	2.9lbs
Standard	ISO22883

Advantages at a glance

Rolling Resistance	● ● ● ● ●
Operating Noise	● ● ● ● ●
Floor Surface Preservation	● ● ● ● ●

Dimensions

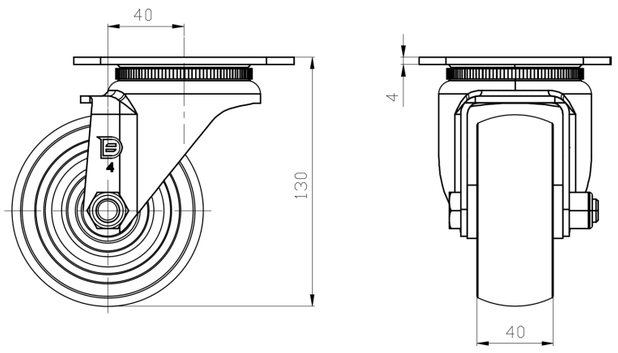

Mounting

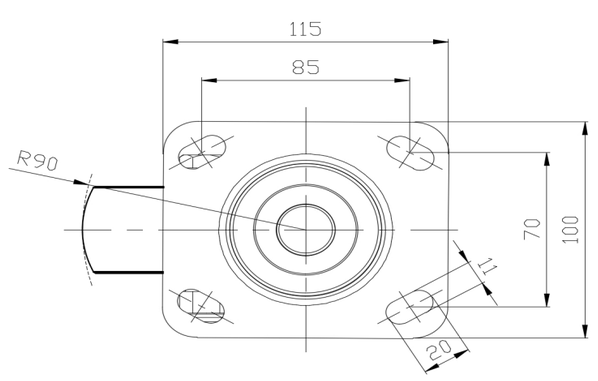

* For any deviation between metric and imperial spec, please refer to the metric spec.

© Copyright 2025 DershengInternational www.dersheng.com