Product Data Sheet

# 1151D Heavy Duty 1.5" Wide General Purposes Caster Series

AQPU (blue round) Wheel Diameter × Wheel Width 100 x 40mm

EAN

YJ-11510400602093

Swivel castor, Top Plate Riveted Stamping Fork - high-grade hole Surface Zine-Plated, Top Plate (4T) Mounting Type device Aluminum core, High Quality Polyurethane Wheel Tread Blue, Bearing - Ball Bearing.

Wheel tread: Made of high quality polyurethane

Wheel Center: Aluminum core

Drawings are for reference only and may differ from the product

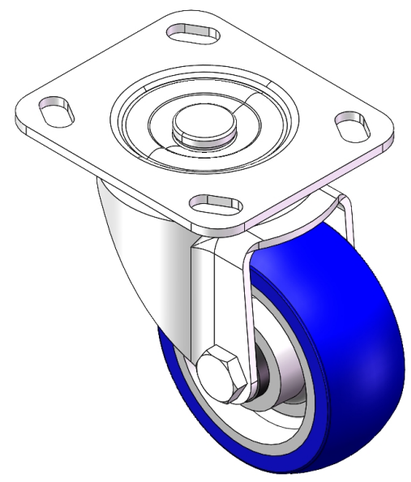

Picture may differ from original product

## Technical Data

◉ Imperial ○ Metric

| | |
|---|---|
| Wheel Diameter | 4 " |
| Wheel Width | 1-5/8 " |
| Wheel Bearing | Wheels With Ball Bearings |
| Plate Size | 4-9/16 " x 4 " |
| Bolt Hole Spacing | 3-3/8 " x 2-3/4 " |
| Plate Hole | 13/16 " x 3/8 " |
| Offset | 1-5/8 " |
| Swivel Interference | 7-1/8 " |
| Overall Height | 5-3/16 " |
| Swivel Radius | 3-9/16 " |
| Hardness Of Tread | 87±5° Shore A |
| Load Capacity (Dynamic) | 441lbs |
| Load Capacity (Static) | 661lbs |
| Temperature | -4°F to +158°F |
| Fork Type | Swivel Caster |
| Stainless | N/A |
| Electrical Conductivity | N/A |
| Anti-Static | N/A |
| Weight | 2.9lbs |
| Standard | ISO22883 |

## Advantages at a glance

| | |
|---|---|
| Rolling Resistance | ● ● ● ● ● |
| Operating Noise | ● ● ● ● ● |
| Floor Surface Preservation | ● ● ● ● ● |

## Dimensions

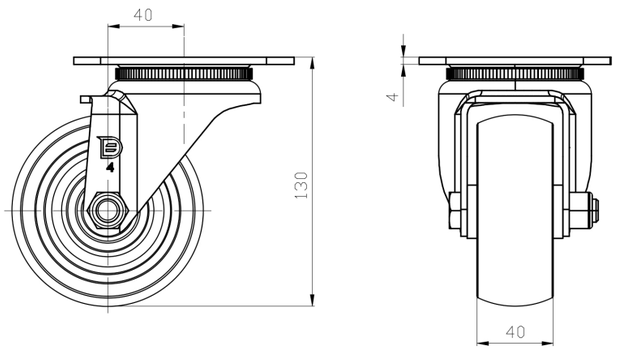


## Mounting

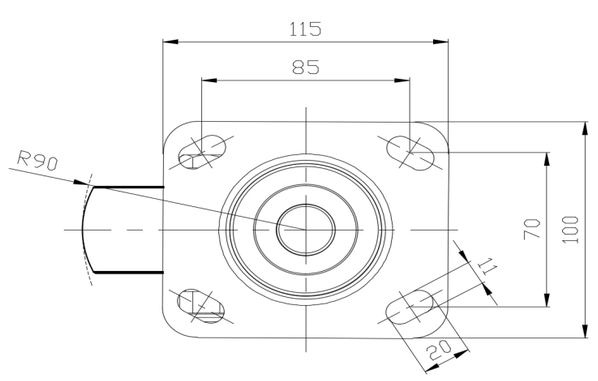


* For any deviation between metric and imperial spec, please refer to the metric spec.

© Copyright 2025 DershengInternational www.dersheng.com