1151D Heavy Duty 1.5" Wide General Purposes Caster Series

SX Rubber Wheel Diameter × Wheel Width 125 x 40mm

EAN

YJ-11510500034023

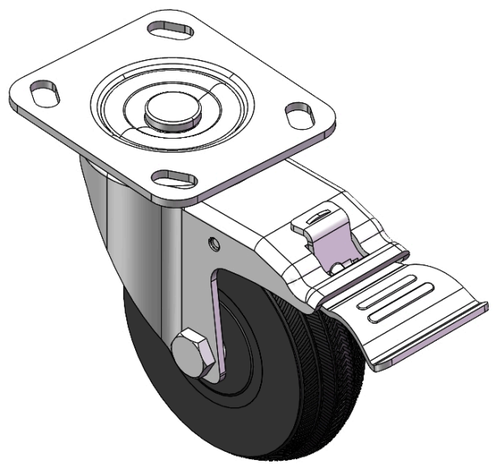

Picture may differ from original product

Drawings are for reference only and may differ from the product

Technical Data

◉ Imperial ○ Metric

Wheel Diameter	5 "
Wheel Width	1-5/8 "
Wheel Bearing	Wheels With Ball Bearings
Plate Size	4-9/16 " x 4 "
Bolt Hole Spacing	3-7/16 " x 2-13/16 "
Plate Hole	13/16 " x 3/8 "
Offset	1-3/4 "
Swivel Interference	13 "
Overall Height	7-1/2 "
Swivel Radius	6-1/2 "
Hardness Of Tread	80±5° Shore A
Load Capacity (Dynamic)	441lbs
Load Capacity (Static)	661lbs
Temperature	-4°F to +248°F
Fork Type	Swivel Caster With Total Brake
Stainless	N/A
Electrical Conductivity	N/A
Anti-Static	N/A
Weight	4.9lbs
Standard	ISO22883

Advantages at a glance

Rolling Resistance	●●●○○
Operating Noise	●●●●○
Floor Surface Preservation	●●●●○

Dimensions

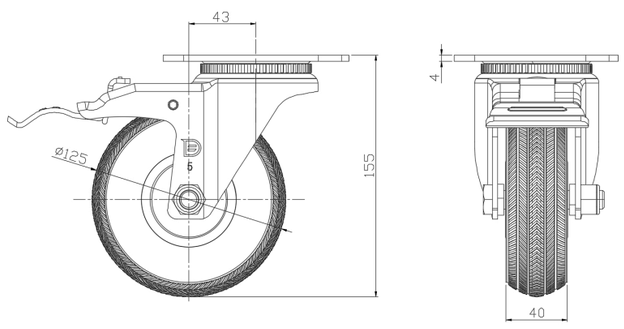

Mounting

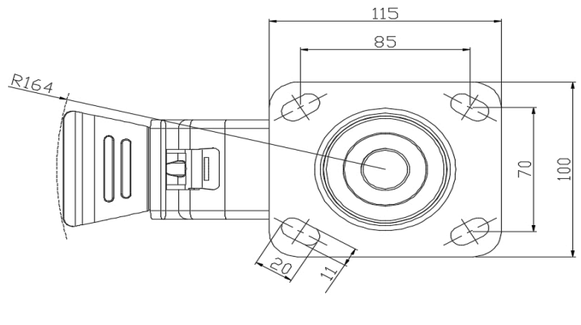

* For any deviation between metric and imperial spec, please refer to the metric spec.

© Copyright 2026 DershengInternational www.dersheng.com