Product Data Sheet

1151D Heavy Duty 1.5" Wide General Purposes Caster Series

QPU (Brown flat) Wheel Diameter × Wheel Width 125 x 40mm

EAN

YJ-11510500531053

Rigid Caster with integral Stamping Fork and 85 x 70mm (3-3/8" x 2-3/4") Bolt Hole Spacing. Zine-Plated, Top Platestyle (3.5T) Mounting Type system. Cast Iron Wheel Center with High Quality Polyurethane tread. Brown color, Ball Bearing.

Wheel tread: Made of high-quality polyurethane

Wheel Center: cast iron core

Drawings are for reference only and may differ from the product

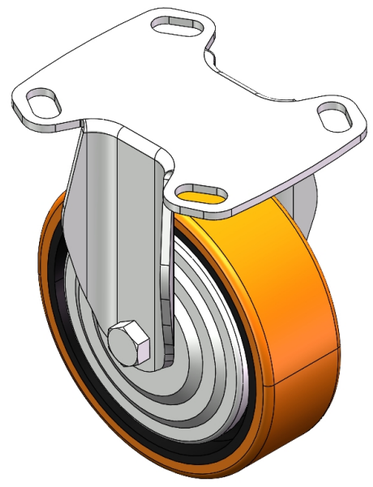

Picture may differ from original product

Technical Data

◉ Metric ○ Imperial

Wheel Diameter	125mm
Wheel Width	40mm
Wheel Bearing	Wheels With Ball Bearings
Plate Size	118 x 95.8mm
Bolt Hole Spacing	85 x 70mm
Plate Hole	20 x 11mm
Overall Height	155mm
Hardness Of Tread	92±5° Shore A
Load Capacity (Dynamic)	350kgs
Load Capacity (Static)	525kgs
Temperature	-20°C to +70°C
Fork Type	Rigid Caster
Stainless	N/A
Electrical Conductivity	N/A
Anti-Static	N/A
Weight	1.92kgs
Standard	ISO22883

Advantages at a glance

Rolling Resistance	● ● ● ● ●
Operating Noise	● ● ● ● ●
Floor Surface Preservation	● ● ● ● ●

Dimensions

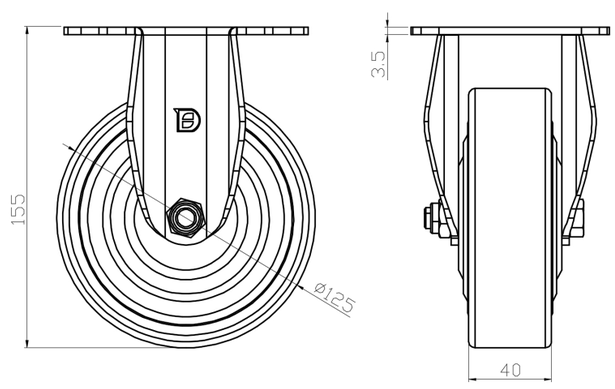

Mounting

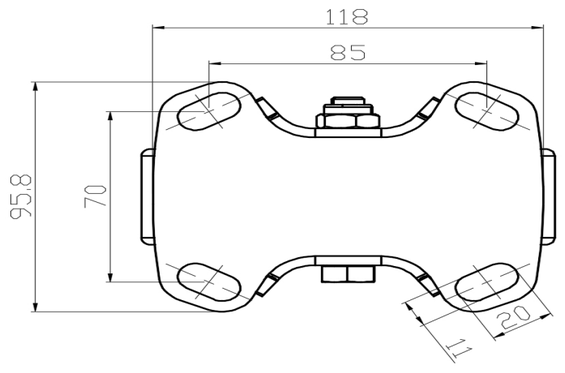

* For any deviation between metric and imperial spec, please refer to the metric spec.

© Copyright 2025 DershengInternational www.dersheng.com