Product Data Sheet

1151D Heavy Duty 1.5" Wide General Purposes Caster Series

WMRC (Transparent) Wheel Diameter × Wheel Width 150 x 40mm

EAN

YJ-11510600071023

Rigid Caster, Stamping Fabricated Caster Fork - D-type hole Extended control lever surface, Top Plate (3.5T) Mounting Type device Reinforced thermoplastic plastic Wheel Center and Wheel Tread Bearing - Ball Bearing.

Wheel tread: Thermoplastic (PA6)
Wheel Center: Thermoplastic (PA6)

Drawings are for reference only and may differ from the product

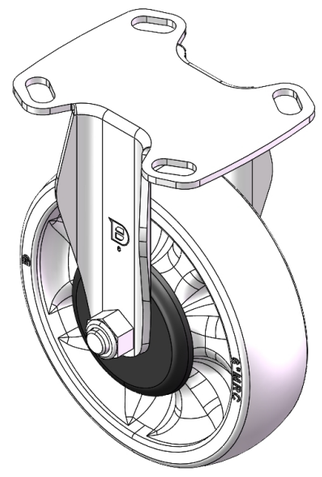

Picture may differ from original product

Technical Data

◉ Imperial ○ Metric

Wheel Diameter	6 "
Wheel Width	1-5/8 "
Wheel Bearing	Wheels With Ball Bearings
Plate Size	4-11/16 " x 3-13/16 "
Bolt Hole Spacing	3-3/8 " x 2-3/4 "
Plate Hole	13/16 " x 3/8 "
Overall Height	7-1/2 "
Hardness Of Tread	75±5° Shore D
Load Capacity (Dynamic)	772lbs
Load Capacity (Static)	1157lbs
Temperature	-4°F to +176°F
Fork Type	Rigid Caster
Stainless	N/A
Electrical Conductivity	N/A
Anti-Static	N/A
Weight	2.5lbs
Standard	ISO22883

Advantages at a glance

Rolling Resistance	● ● ● ● ●
Operating Noise	● ● ○ ○ ○
Floor Surface Preservation	● ● ○ ○ ○

Dimensions

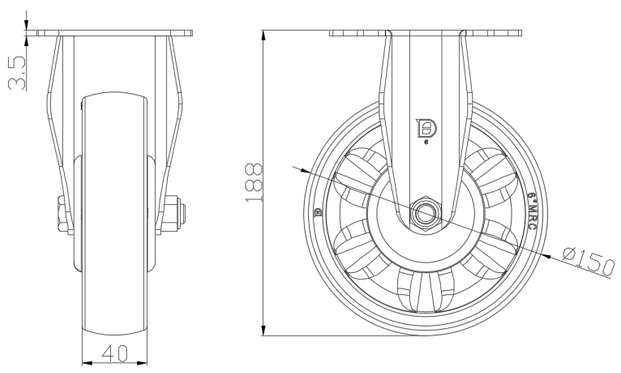

Mounting

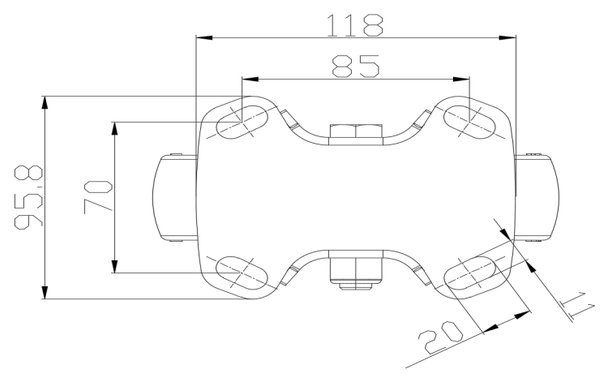

* For any deviation between metric and imperial spec, please refer to the metric spec.

© Copyright 2025 DershengInternational www.dersheng.com