Product Data Sheet

1151D Heavy Duty 1.5" Wide General Purposes Caster Series

PU (Red Flat) Wheel Diameter × Wheel Width 150 × 42 mm

EAN

YJ-11510600332013

Swivel Caster with integral Stamping Fork and D-shaped hole. Zine-Plated, Mounting Type - Top Plate. Cast Iron Wheel Center with High Quality Polyurethane tread. Red Cast Iron finish, Ball Bearing.

Wheel tread: Made of high-quality polyurethane

Wheel Center: cast iron core

Drawings are for reference only and may differ from the product

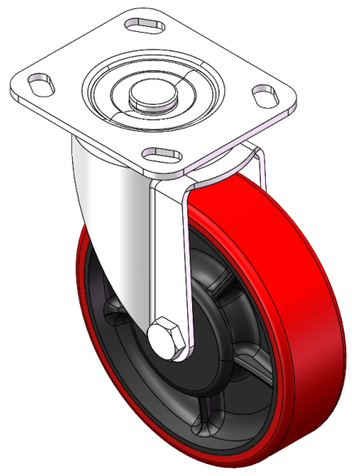

Picture may differ from original product

Technical Data

◉ Metric ○ Imperial

Wheel Diameter	150mm
Wheel Width	42mm
Wheel Bearing	Wheels With Ball Bearings
Plate Size	115 x 85mm
Bolt Hole Spacing	85 x 70mm
Plate Hole	20 x 11mm
Offset	40mm
Swivel Interference	232mm
Overall Height	188mm
Swivel Radius	116mm
Hardness Of Tread	93±5° Shore A
Load Capacity (Dynamic)	350kgs
Load Capacity (Static)	525kgs
Temperature	-20°C to +70°C
Fork Type	Swivel Caster
Stainless	N/A
Electrical Conductivity	N/A
Anti-Static	N/A
Weight	2.59kgs
Standard	ISO22883

Advantages at a glance

Rolling Resistance	● ● ● ○ ○
Operating Noise	● ● ● ● ○
Floor Surface Preservation	● ● ● ● ○

Dimensions

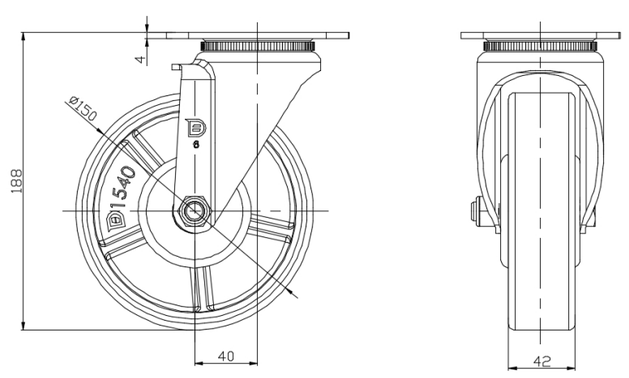

Mounting

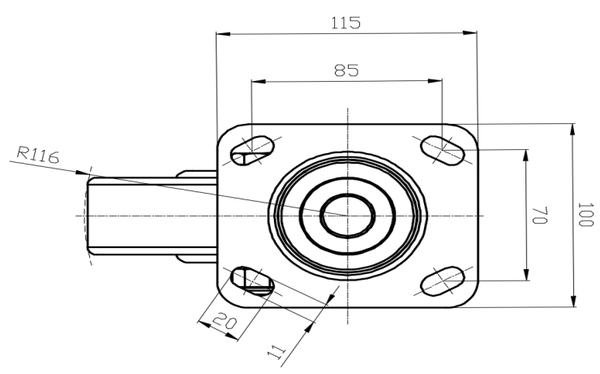

* For any deviation between metric and imperial spec, please refer to the metric spec.

© Copyright 2025 DershengInternational www.dersheng.com