Product Data Sheet

1151D Heavy Duty 1.5" Wide General Purposes Caster Series

WCPD (White) Wheel Diameter × Wheel Width 150 x 40mm

EAN

YJ-11510600442023

Swivel Caster, Top Plate Riveted Stamping Fork - D-type hole Surface Zine-Plated, Top Plate (4T) Mounting Type device Polypropylene Wheel Center, Wheel Tread White, Bearing - Ball Bearing

Wheel Tread: PP polypropylene

Wheel Center: PP polypropylene

Drawings are for reference only and may differ from the product

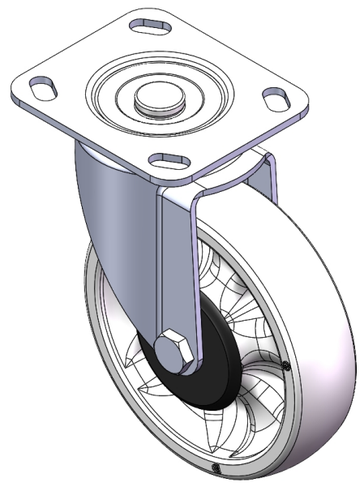

Picture may differ from original product

Technical Data

◉ Imperial ○ Metric

Wheel Diameter	6 "
Wheel Width	1-5/8 "
Wheel Bearing	Wheels With Ball Bearings
Plate Size	4-9/16 " x 4 "
Bolt Hole Spacing	3-3/8 " x 2-3/4 "
Plate Hole	13/16 " x 3/8 "
Offset	2-3/16 "
Swivel Interference	9-1/8 "
Overall Height	7-1/2 "
Swivel Radius	4-9/16 "
Hardness Of Tread	72±5° Shore D
Load Capacity (Dynamic)	551lbs
Load Capacity (Static)	827lbs
Temperature	4°F to +140°F
Fork Type	Swivel Caster
Stainless	N/A
Electrical Conductivity	N/A
Anti-Static	N/A
Weight	3.4lbs
Standard	ISO22883

Advantages at a glance

Rolling Resistance	● ● ● ● ●
Operating Noise	● ● ● ○ ○
Floor Surface Preservation	● ● ● ○ ○

Dimensions

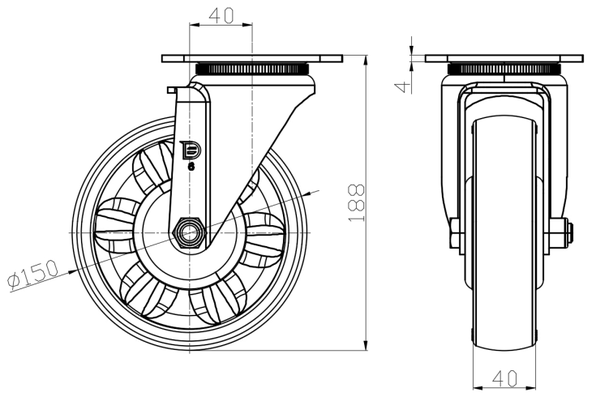

Mounting

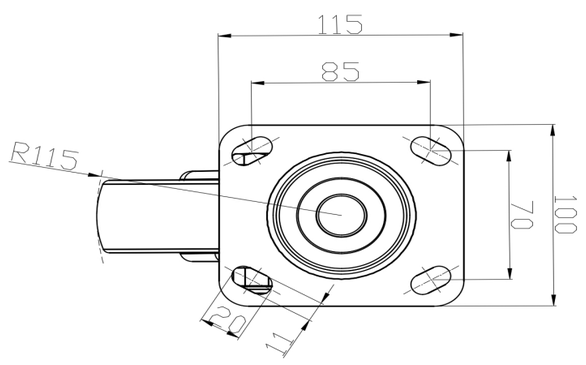

* For any deviation between metric and imperial spec, please refer to the metric spec.

© Copyright 2025 DershengInternational www.dersheng.com