PU Series

Wheel Diameter × Wheel Width 150 x 49mm

EAN

YJ-12031206201372

Excellent Floor Surface Preservation and wear resistance, low noise.
Excellent Hydrolysis Resistance.
Suitable for tropical regions and humid working environments.
PU Green

Wheel Center: cast iron core
Wheel Tread: High-quality polyurethane
Bearing: Long ball bearing

Drawings are for reference only and may differ from the product

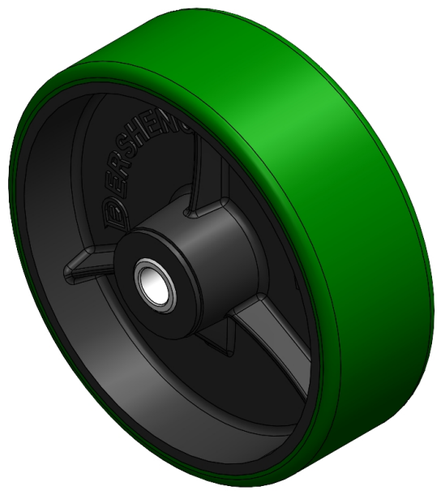

Picture may differ from original product

Technical Data

◉ Metric ○ Imperial

Wheel Diameter(D)	150mm
Wheel Width(T2)	49mm
Wheel Bearing	Annular Ball Bearing
Axle Bore(d)	13mm
Axle Bore(S)	—
Bearing Bore Depth(t)	—
Hub Lenth(T1)	55.6mm
Hardness Of Tread	92±5° Shore A
Load Capacity (Dynamic)	750kgs
Load Capacity (Static)	1125kgs
Temperature	-20°C to +70°C
Electrical Conductivity	N/A
Anti-Static	N/A
Weight	1.73kgs
Standard	ISO22883

Advantages at a glance

Rolling Resistance	● ● ● ○ ○
Operating Noise	● ● ● ● ○
Floor Surface Preservation	● ● ● ● ○

2D Dimensional Drawing of Single Wheel

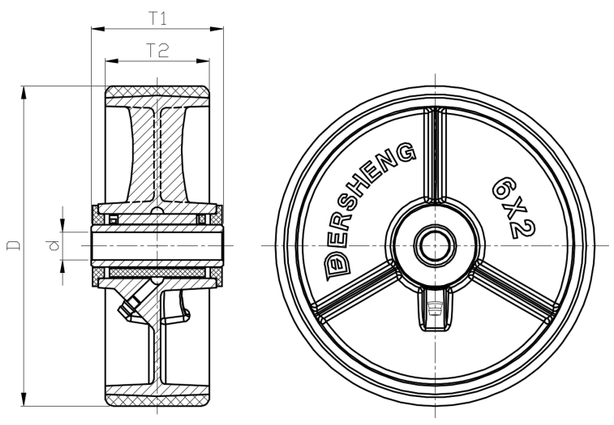

* For any deviation between metric and imperial spec, please refer to the metric spec.

© Copyright 2026 DershengInternational www.dersheng.com