PU Series

Wheel Diameter × Wheel Width 150 x 49mm

EAN

YJ-12031206201372

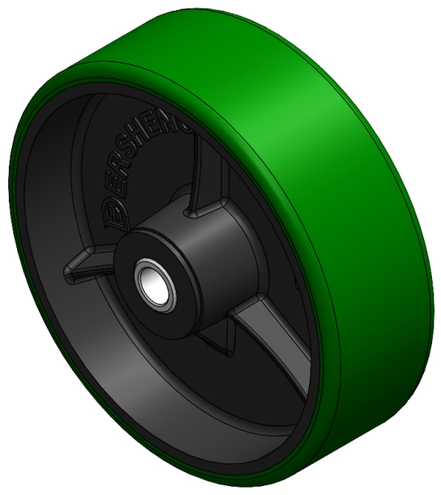

Picture may differ from original product

Excellent Floor Surface Preservation and wear resistance, low noise.
Excellent Hydrolysis Resistance.
Suitable for tropical regions and humid working environments.
PU Green

Wheel Center: cast iron core
Wheel Tread: High-quality polyurethane
Bearing: Long ball bearing

Drawings are for reference only and may differ from the product

Technical Data

◉ Imperial ○ Metric

Wheel Diameter(D)	6 "
Wheel Width(T2)	2 "
Wheel Bearing	Annular Ball Bearing
Axle Bore(d)	9/16 "
Axle Bore(S)	—
Bearing Bore Depth(t)	—
Hub Lenth(T1)	2-1/4 "
Hardness Of Tread	92±5° Shore A
Load Capacity (Dynamic)	1653lbs
Load Capacity (Static)	2480lbs
Temperature	-4°F to +158°F
Electrical Conductivity	N/A
Anti-Static	N/A
Weight	3.8lbs
Standard	ISO22883

Advantages at a glance

Rolling Resistance	● ● ● ○ ○
Operating Noise	● ● ● ● ○
Floor Surface Preservation	● ● ● ● ○

2D Dimensional Drawing of Single Wheel

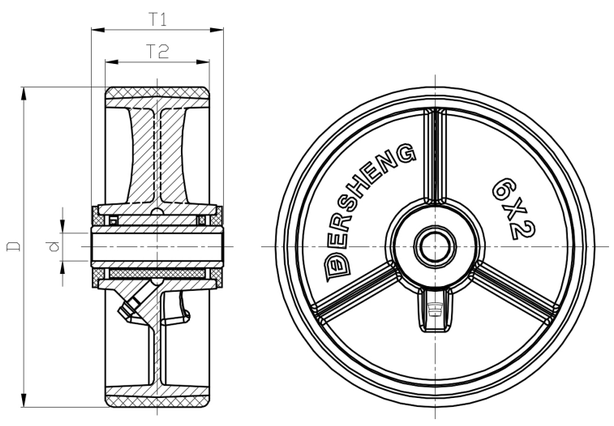

* For any deviation between metric and imperial spec, please refer to the metric spec.

© Copyright 2026 DershengInternational www.dersheng.com