QPU Series

Wheel Diameter × Wheel Width 100 x 40mm

EAN

YJ-12035304180103

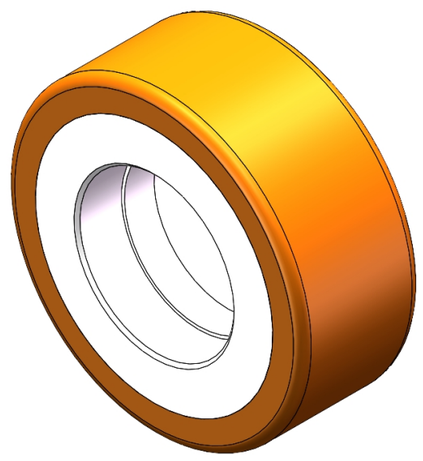

Picture may differ from original product

It has good elasticity, reduces pushing resistance, improves machine controllability, and has good wear resistance.
It has excellent Hydrolysis Resistance.
Suitable for tropical regions and humid working environments.
QPU Brown

Wheel Center: Iron core

Wheel Tread: High-quality polyurethane

Bearings: —

Drawings are for reference only and may differ from the product

Technical Data

◉ Metric ○ Imperial

Wheel Diameter(D)	100mm
Wheel Width(T2)	40mm
Wheel Bearing	Without Bearing
Axle Bore(d)	—
Axle Bore(S)	52mm
Bearing Bore Depth(t)	15mm
Hardness Of Tread	92±5° Shore A
Load Capacity (Dynamic)	375kgs
Load Capacity (Static)	562.5kgs
Temperature	-20°C to +70°C
Electrical Conductivity	N/A
Anti-Static	N/A
Weight	1.06kgs
Standard	ISO22883

Advantages at a glance

Rolling Resistance	● ● ● ● ●
Operating Noise	● ● ● ● ●
Floor Surface Preservation	● ● ● ● ●

2D Dimensional Drawing of Single Wheel

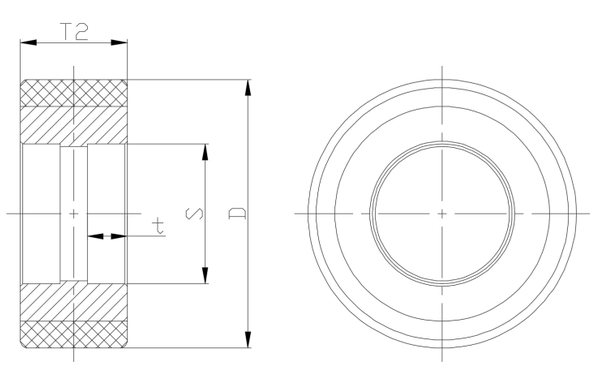

* For any deviation between metric and imperial spec, please refer to the metric spec.

© Copyright 2025 DershengInternational www.dersheng.com