VQPU Series

Wheel Diameter × Wheel Width 250 x 62mm

EAN

YJ-12035410256401



Picture may differ from original product

Good elasticity, reduces pushing resistance, improves machine controllability, and has good wear resistance.
Excellent Hydrolysis Resistance.
Suitable for tropical regions and humid working environments.
QPU gray Wheel Tread arc shape.

Wheel Center: cast iron core

Wheel Tread: High-quality polyurethane

Bearings: —

Drawings are for reference only and may differ from the product

Technical Data

◉ Metric ○ Imperial

Wheel Diameter(D)	250mm
Wheel Width(T2)	62mm
Wheel Bearing	Without Bearing
Axle Bore(d)	—
Axle Bore(S)	52mm
Bearing Bore Depth(t)	15mm
Hub Lenth(T1)	61mm
Hardness Of Tread	77±5° Shore A
Load Capacity (Dynamic)	1050kgs
Load Capacity (Static)	1575kgs
Temperature	-20°C to +70°C
Electrical Conductivity	N/A
Anti-Static	N/A
Weight	7.79kgs
Standard	ISO22883

Advantages at a glance

Rolling Resistance	● ● ● ● ●
Operating Noise	● ● ● ● ●
Floor Surface Preservation	● ● ● ● ●

2D Dimensional Drawing of Single Wheel

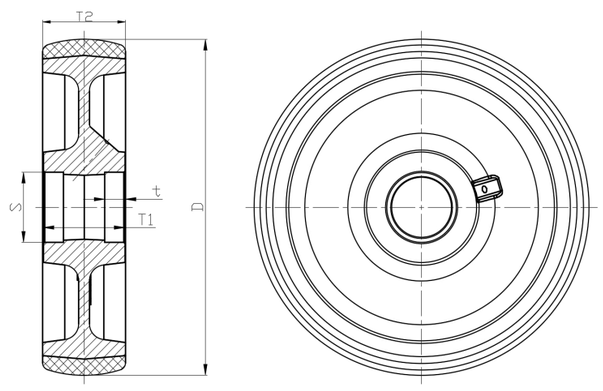

* For any deviation between metric and imperial spec, please refer to the metric spec.

© Copyright 2026 DershengInternational www.dersheng.com