XPU Series

Wheel Diameter × Wheel Width 185 x 70mm

EAN

YJ-12036107280103

Excellent Mechanical Properties, maintaining Heavy Load during high-speed movement; good wear resistance; not easily deformed.
Excellent resistance to chemicals, solvents, and corrosion.
Suitable for Forklift Trucks, electric Forklift Trucks, Heavy duty machines, AGVs, and automated industrial applications.
XPU Burgundy

Wheel Center: Iron core
Wheel Tread: High-quality polyurethane

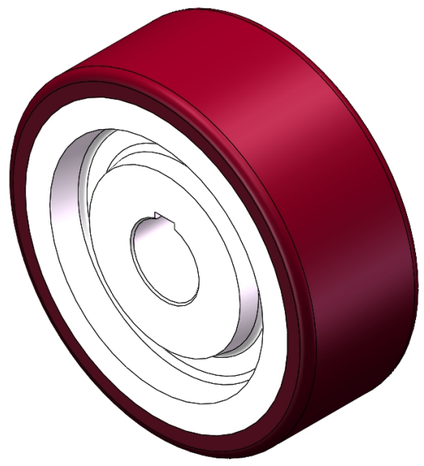

Picture may differ from original product

Product descriptions are for reference only. The actual product shall prevail.

Technical Data

◉ Metric ○ Imperial

Wheel Diameter（D）	185mm
Wheel Width（T2）	70mm
Wheel installation — Hub Lenth (T1)	60mm
Wheel Mounting Bore Diameter	40mm
Keyway Width	12mm
Wheel Keyway Depth (H)	43.3mm
Load Capacity (Static)	1500kgs
Load Capacity at 4 km/h	100kgs
Load Capacity at 6 km/h	850kgs
Load Capacity at 10 km/h	700kgs
Load Capacity at 16 km/h	400kgs
Hardness Of Tread	92±5° Shore A
Temperature	-20°C to +70°C
Tread Pattern	—
Wheel centre/ rim	Iron core/galvanized
Non-Marking	Y
Conductive	N/A
Anti	N/A
Weight	8.95kgs
Standard	ISO22883

Advantages at a glance

Rolling Resistance	● ● ● ● ●
Operating Noise	● ● ● ● ●
Floor Surface Preservation	● ● ● ● ○

2D Dimensional Drawing of Drive Wheel

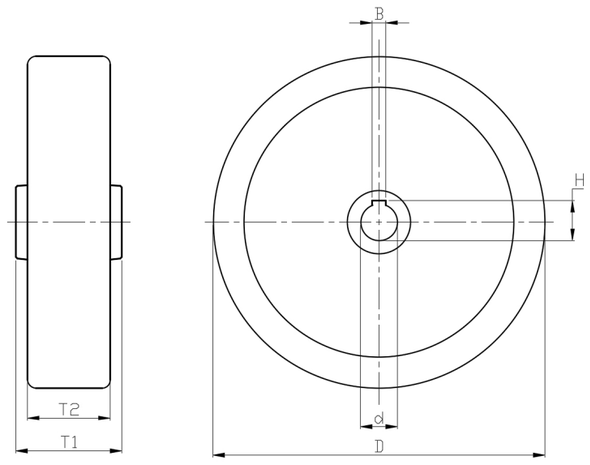

* For any deviation between metric and imperial spec, please refer to the metric spec.

© Copyright 2025 DershengInternational www.dersheng.com