XPU Series

Wheel Diameter × Wheel Width 280 x 80mm

EAN

YJ-12036111230103

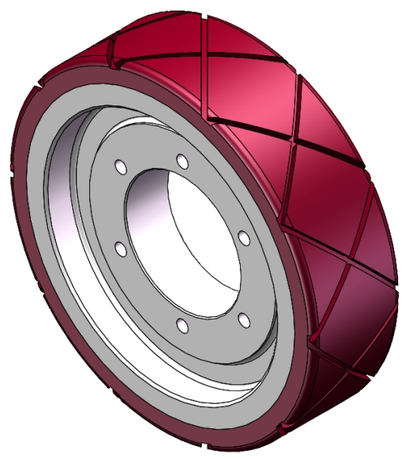

Picture may differ from original product

Excellent Mechanical Properties, maintaining Heavy Load during high-speed movement; good wear resistance; not easily deformed.
Excellent resistance to chemicals, solvents, and corrosion.
Suitable for Forklift Trucks, Electric Stackers, Heavy duty machines, AGVs, and automated industrial applications.
XPU, burgundy, with a machined diamond texture.
Increased ground grip, effectively improving anti-slip performance.

Wheel Center: Iron core
Wheel Tread: High-quality polyurethane

Product descriptions are for reference only. The actual product shall prevail.

Technical Data

◉ Imperial ○ Metric

Wheel Diameter（D）	11-1/16
Wheel Width（T2）	3-1/8 "
Wheel installation — Hub Lenth (T1)	40mm
Wheel center-bore diameter (d)	4-3/16 "
Wheel Mounting Bolt Hole PCD Diameter	3/8 "
Wheel Mounting Bolt Hole PCD	5-3/16 "
# Of Wheel mounting bolt boles	6
Wheel mounting bolt hole (M)	—
Number of wheel mounting bolt holes	—
Load Capacity (Static)	6614lbs
Load Capacity at 4 km/h	4409lbs
Load Capacity at 6 km/h	3748lbs
Load Capacity at 10 km/h	3086lbs
Load Capacity at 16 km/h	800kgs
Hardness Of Tread	92±5° Shore A
Temperature	-4°F to +158°F
Tread Pattern	菱形纹
Wheel centre/ rim	Iron core/galvanized
Non-Marking	Y
Conductive	N/A
Anti	N/A
Weight	36.0lbs
Standard	ISO22883

Advantages at a glance

Rolling Resistance	● ● ● ● ●
Operating Noise	● ● ● ● ●
Floor Surface Preservation	● ● ● ● ○

2D Dimensional Drawing of Drive Wheel

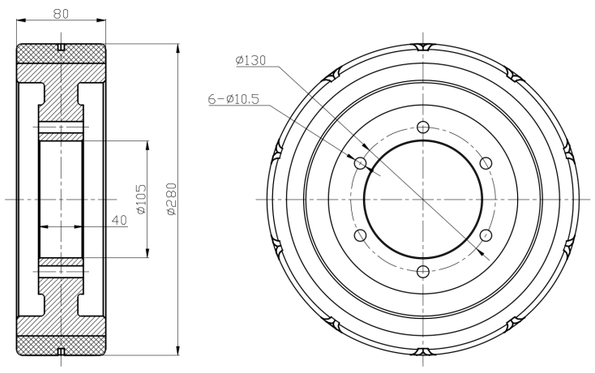

* For any deviation between metric and imperial spec, please refer to the metric spec.

© Copyright 2025 DershengInternational www.dersheng.com