XPU Series

Wheel Diameter × Wheel Width 330 x 142mm

EAN

YJ-12036113586101

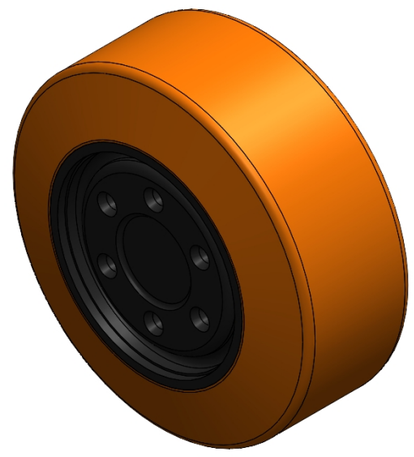

Picture may differ from original product

Excellent Mechanical Properties, maintaining Heavy Load during high-speed movement; good wear resistance; not easily deformed.
Excellent resistance to chemicals, solvents, and corrosion.
Suitable for Forklift Trucks, electric Forklift Trucks, Heavy duty machines, AGVs, and automated industrial applications.
XPU Orange

Wheel Center: cast iron core
Wheel Tread: High-quality polyurethane

Product descriptions are for reference only. The actual product shall prevail.

Technical Data

◉ Metric ○ Imperial

Wheel Diameter（D）	330mm
Wheel Width（T2）	142mm
Wheel installation — Hub Lenth (T1)	—
Wheel center-bore diameter (d)	—
Wheel Mounting Bolt Hole PCD Diameter	16mm
Wheel Mounting Bolt Hole PCD	118mm
# Of Wheel mounting bolt boles	6
Wheel mounting bolt hole (M)	—
Number of wheel mounting bolt holes	—
Load Capacity (Static)	3300kgs
Load Capacity at 4 km/h	2200kgs
Load Capacity at 6 km/h	1870kgs
Load Capacity at 10 km/h	1540kgs
Load Capacity at 16 km/h	880kgs
Hardness Of Tread	92±5° Shore A
Temperature	-20°C to +70°C
Tread Pattern	—
Wheel centre/ rim	Cast iron / spray-baked black paint
Non-Marking	Y
Conductive	N/A
Anti	N/A
Weight	21.68kgs
Standard	ISO22883

Advantages at a glance

Rolling Resistance	● ● ● ● ●
Operating Noise	● ● ● ● ●
Floor Surface Preservation	● ● ● ● ○

2D Dimensional Drawing of Drive Wheel

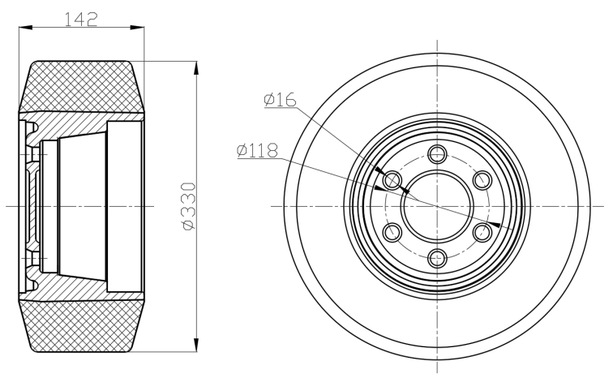

* For any deviation between metric and imperial spec, please refer to the metric spec.

© Copyright 2025 DershengInternational www.dersheng.com