QPU Series

Wheel Diameter × Wheel Width 150 x 40mm

EAN

YJ-12036306186179

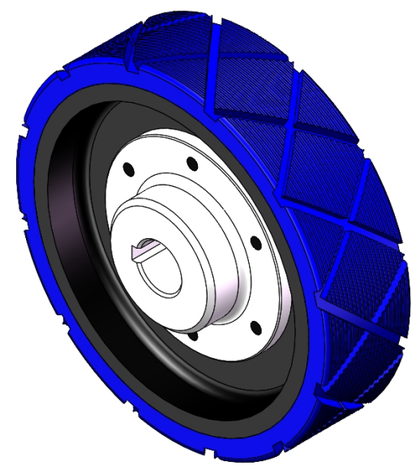

Picture may differ from original product

Product descriptions are for reference only. The actual product shall prevail.

Technical Data

◉ Metric ○ Imperial

Wheel Diameter（D）	150mm
Wheel Width（T2）	40mm
Wheel installation — Hub Lenth (T1)	32mm
Wheel Mounting Bore Diameter	20mm
Keyway Width	6mm
Wheel Keyway Depth (H)	22.8mm
Load Capacity (Static)	720kgs
Load Capacity at 4 km/h	480kgs
Load Capacity at 6 km/h	408kgs
Load Capacity at 10 km/h	336kgs
Load Capacity at 16 km/h	192kgs
Hardness Of Tread	87±5° Shore A
Temperature	-20°C to +70°C
Tread Pattern	—
Wheel centre/ rim	
Non-Marking	Y
Conductive	N/A
Anti	N/A
Weight	1.88kgs
Standard	ISO22883

Advantages at a glance

Rolling Resistance	● ● ● ● ●
Operating Noise	● ● ● ● ●
Floor Surface Preservation	● ● ● ● ●

2D Dimensional Drawing of Drive Wheel

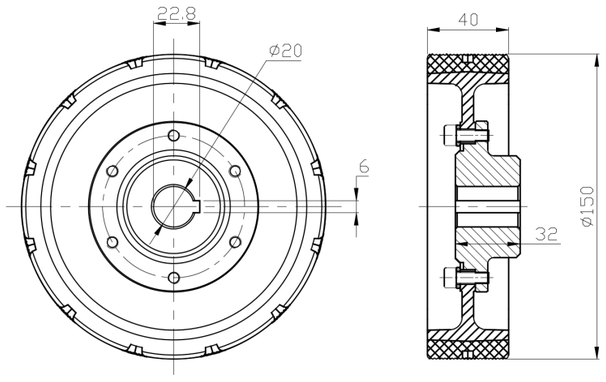

* For any deviation between metric and imperial spec, please refer to the metric spec.

© Copyright 2026 DershengInternational www.dersheng.com