# AXPU Series

wheel diameter × wheel width 125 x 50mm

YJ-12036405201371

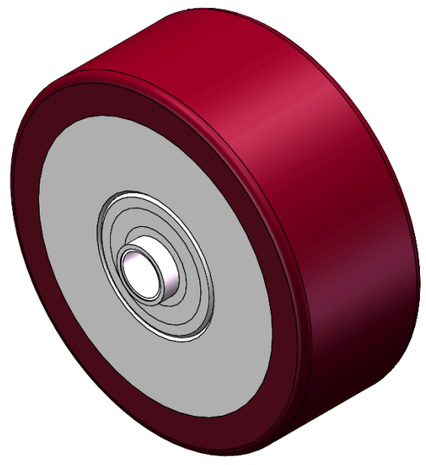

Picture may differ from original product

Drawings are for reference only and may differ from the product

## Technical Data

◉ Metric ○ Imperial

| | |
|---|---|
| Wheel Diameter(D) | 125mm |
| Wheel Width(T2) | 50mm |
| Wheel Bearing | Ball Bearing |
| Axle Bore(d) | 15.2mm |
| Axle Bore(S) | — |
| Bearing Bore Depth(t) | — |
| Hub Lenth(T1) | 62.6mm |
| Hardness Of Tread | 92±5° Shore A |
| Load Capacity (Dynamic) | 600kgs |
| Load Capacity (Static) | 900kgs |
| Temperature | -20°C to +70°C |
| Electrical Conductivity | N/A |
| Anti-Static | N/A |
| Weight | 2.95kgs |
| Standard | ISO22883 |

## Advantages at a glance

| | |
|---|---|
| Rolling Resistance | ●●●○○ |
| Operating Noise | ●●●●○ |
| Floor Surface Preservation | ●●●●○ |

## 2D Dimensional Drawing of Single Wheel

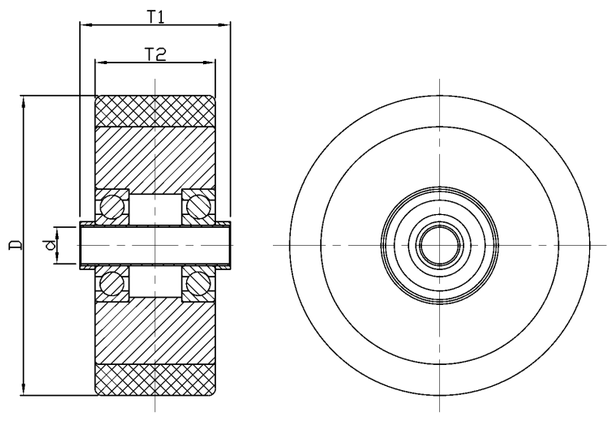


* For any deviation between metric and imperial spec, please refer to the metric spec.

© Copyright 2026 DershengInternational www.dersheng.com