XPU Series

Wheel Diameter × Wheel Width 85 x 114mm

EAN

YJ-12036453480271



Picture may differ from original product

Drawings are for reference only and may differ from the product

Technical Data

◉ Metric ○ Imperial

Wheel Diameter(D)	85mm
Wheel Width(T2)	114mm
Wheel Bearing	Ball Bearing
Axle Bore(d)	25mm
Axle Bore(S)	—
Bearing Bore Depth(t)	—
Hub Lenth(T1)	—mm
Hardness Of Tread	92±5° Shore A
Load Capacity (Dynamic)	760kgs
Load Capacity (Static)	1140kgs
Temperature	-20°C to +70°C
Electrical Conductivity	N/A
Anti-Static	N/A
Weight	2.35kgs
Standard	ISO22883

Advantages at a glance

Rolling Resistance	●●●○○
Operating Noise	●●●●○
Floor Surface Preservation	●●●●○

2D Dimensional Drawing of Single Wheel

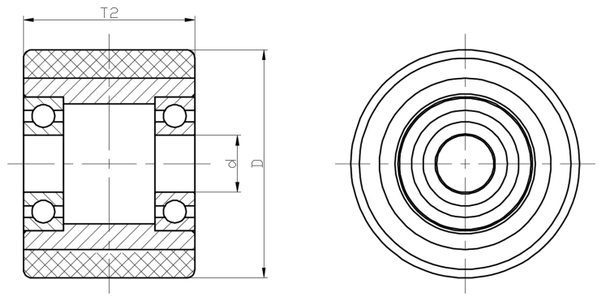

* For any deviation between metric and imperial spec, please refer to the metric spec.

© Copyright 2026 DershengInternational www.dersheng.com