VXPU Series

Wheel Diameter × Wheel Width 250 x 62mm

EAN

YJ-12036910256101



Picture may differ from original product

Excellent Mechanical Properties, maintaining Heavy Load during high-speed movement; good wear resistance; not easily deformed.
Excellent resistance to chemicals, solvents, and corrosion.
Suitable for Forklift Trucks, Electric Stackers, Heavy duty machines, AGVs, and automated industrial applications.
XPU Burgundy, Curved Wheel Surface

Wheel Center: cast iron core
Wheel Tread: High-quality polyurethane
Bearings: —

Drawings are for reference only and may differ from the product

Technical Data

◉ Metric ○ Imperial

Wheel Diameter(D)	250mm
Wheel Width(T2)	62mm
Wheel Bearing	Without Bearing
Axle Bore(d)	—
Axle Bore(S)	52mm
Bearing Bore Depth(t)	15mm
Hub Lenth(T1)	61mm
Hardness Of Tread	92±5° Shore A
Load Capacity (Dynamic)	1500kgs
Load Capacity (Static)	2250kgs
Temperature	-20°C to +70°C
Electrical Conductivity	N/A
Anti-Static	N/A
Weight	7.85kgs
Standard	ISO22883

Advantages at a glance

Rolling Resistance	● ● ● ○ ○
Operating Noise	● ● ● ● ○
Floor Surface Preservation	● ● ● ● ○

2D Dimensional Drawing of Single Wheel

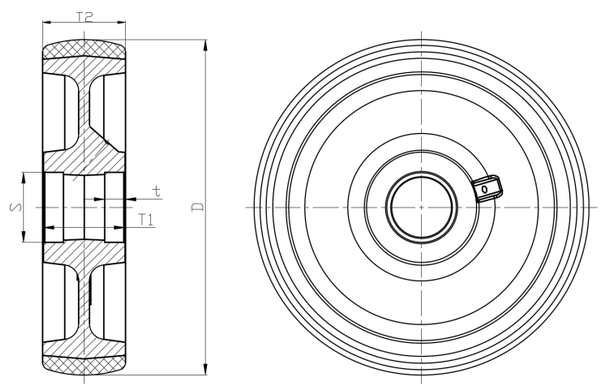

* For any deviation between metric and imperial spec, please refer to the metric spec.

© Copyright 2026 DershengInternational www.dersheng.com