ZHPU Series

Wheel Diameter × Wheel Width 50 x 20mm

YJ-12037402080399



Picture may differ from original product

Drawings are for reference only and may differ from the product

Technical Data

◉ Imperial ○ Metric

Wheel Diameter(D)	2 "
Wheel Width(T2)	1-11/16 "
Wheel Bearing	Ball Bearing
Axle Bore(d)	3/8 "
Axle Bore(S)	—
Bearing Bore Depth(t)	—
Hub Lenth(T1)	1-7/8 "
Hardness Of Tread	92±5° Shore A
Load Capacity (Dynamic)	772lbs
Load Capacity (Static)	1157lbs
Temperature	-4°F to +158°F
Electrical Conductivity	N/A
Anti-Static	Y 10^6/～10^9/Ω
Weight	0.8lbs
Standard	ISO22883

Advantages at a glance

Rolling Resistance	●●●●●
Operating Noise	●●●●○
Floor Surface Preservation	●●●●●

2D Dimensional Drawing of Single Wheel

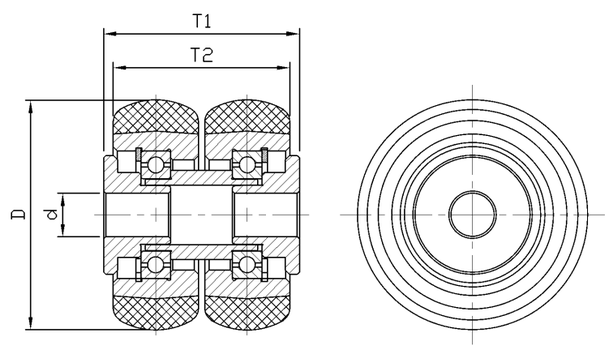

* For any deviation between metric and imperial spec, please refer to the metric spec.

© Copyright 2026 DershengInternational www.dersheng.com