# HPU Series

Wheel Diameter × Wheel Width 100 x 50mm

YJ-12037604200103

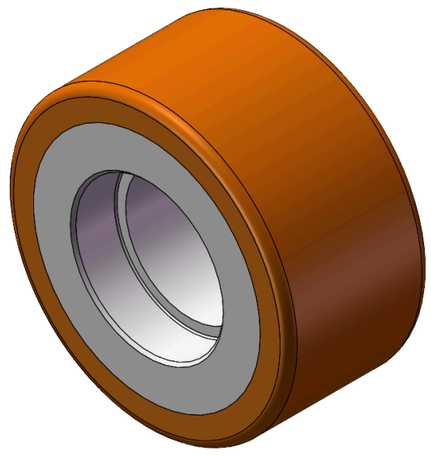

Picture may differ from original product

Drawings are for reference only and may differ from the product

## Technical Data

◉ Metric ○ Imperial

| | |
|---|---|
| Wheel Diameter(D) | 100mm |
| Wheel Width(T2) | 50mm |
| Wheel Bearing | Without Bearing |
| Axle Bore(d) | — |
| Axle Bore(S) | 52mm |
| Bearing Bore Depth(t) | 15mm |
| Hub Lenth(T1) | —mm |
| Hardness Of Tread | 92±5° Shore A |
| Load Capacity (Dynamic) | 450kgs |
| Load Capacity (Static) | 675kgs |
| Temperature | -20°C to +70°C |
| Electrical Conductivity | N/A |
| Anti-Static | N/A |
| Weight | 1.40kgs |
| Standard | ISO22883 |

## Advantages at a glance

| | |
|---|---|
| Rolling Resistance | ●●●●● |
| Operating Noise | ●●●●○ |
| Floor Surface Preservation | ●●●●● |

## 2D Dimensional Drawing of Single Wheel

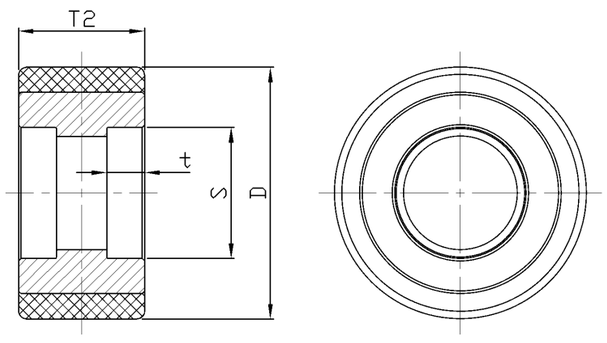


* For any deviation between metric and imperial spec, please refer to the metric spec.

© Copyright 2026 DershengInternational www.dersheng.com