XPU Series

Wheel Diameter × Wheel Width 315 x 142mm

EAN

YJ-12037713586200

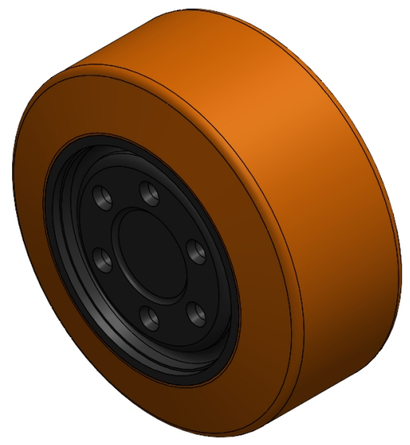

Picture may differ from original product

Excellent Mechanical Properties and wear resistance
Excellent resistance to chemicals and corrosion
Suitable for use in Forklift Trucks, Electric Stackers, AGVs, and floor scrubbers
HPU, orange-yellow

Wheel Center: cast iron core
Wheel Tread: High-quality polyurethane

Product descriptions are for reference only. The actual product shall prevail.

Technical Data

◉ Metric ○ Imperial

Wheel Diameter（D）	315mm
Wheel Width（T2）	142mm
Wheel installation — Hub Lenth (T1)	—
Wheel center-bore diameter (d)	—
Wheel Mounting Bolt Hole PCD Diameter	16mm
Wheel Mounting Bolt Hole PCD	118mm
# Of Wheel mounting bolt boles	6
Wheel mounting bolt hole (M)	—
Number of wheel mounting bolt holes	—
Load Capacity (Static)	3645kgs
Load Capacity at 4 km/h	2430kgs
Load Capacity at 6 km/h	2065.5kgs
Load Capacity at 10 km/h	1701kgs
Load Capacity at 16 km/h	972kgs
Hardness Of Tread	92±5° Shore A
Temperature	-20°C to +70°C
Tread Pattern	—
Wheel centre/ rim	Cast iron / spray-baked black paint
Non-Marking	Y
Conductive	N/A
Anti	N/A
Weight	20.96kgs
Standard	ISO22883

Advantages at a glance

Rolling Resistance	● ● ● ● ●
Operating Noise	● ● ● ● ●
Floor Surface Preservation	● ● ● ● ●

2D Dimensional Drawing of Drive Wheel

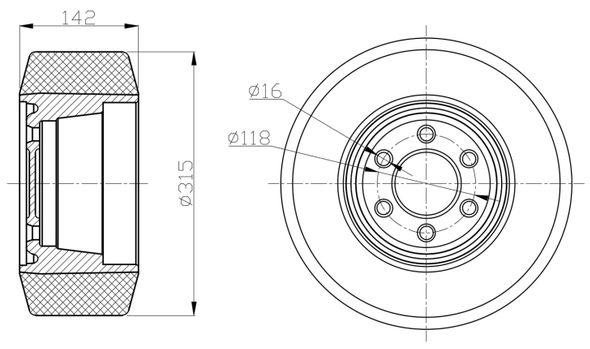

* For any deviation between metric and imperial spec, please refer to the metric spec.

© Copyright 2025 DershengInternational www.dersheng.com