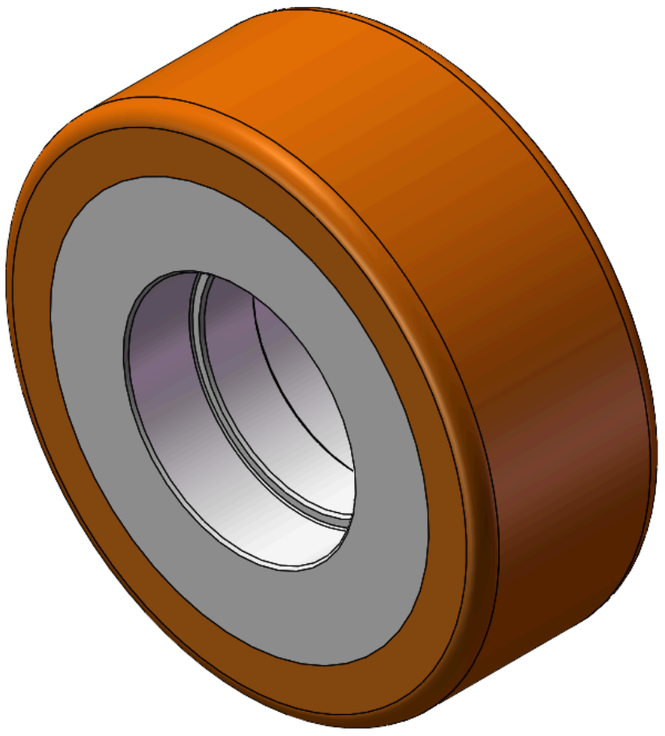

Picture may differ from original product


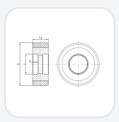

AHPU Series

Wheel Diameter × Wheel Width 90 x 34mm

YJ-12039163130104 Copy model no.

Wheel Diameter(D)	Load Capacity (Dynamic)	Wheel Bearing
90mm	**100kgs**	**Without Bearing**

- Excellent Mechanical Properties and wear resistance
- Excellent resistance to chemicals and corrosion
- Suitable for use in Forklift Trucks, Electric Stackers, AGVs, and floor scrubbers
- HPU Orange
- Wheel Center: Aluminum core
- Wheel Tread: High-quality polyurethane
- Bearings: —

Product descriptions are for reference only. The actual product shall prevail.

Product Data Sheet (Metric) | 3D Drawing Request

3D drawings are for members only. Please log in to download.

Product Data Sheet

Metric | Imperial

Wheel Diameter(D)	**90mm**	Wheel Width(T2)	**34mm**
Wheel Bearing	**Without Bearing**	Axle Bore(d)	**—**
Axle Bore(S)	**42mm**	Bearing Bore Depth(t)	**12mm**
Hub Lenth(T1)	**41.5mm**	Hardness Of Tread	**92±5° Shore A**
Load Capacity (Dynamic)	**100kgs**	Load Capacity (Static)	**150kgs**
Temperature	**-20°C to +70°C**	Electrical Conductivity	**N/A**
Anti-Static	**N/A**	Weight	**0.34kgs**
Standard	**ISO22883**		

* For any deviation between metric and imperial spec, please refer to the metric spec.

Performance

Rolling Smoothness
Max. 5 points Score: 5

Quiet Operation
Max. 5 points Score: 4

Floor Surface Preservation
Max. 5 points Score: 5

Downloads

PDF **YJ-120391631301043.pdf**
Product Data Sheet (Metric)

3D **12039163130104.rar**
3D drawings are for members only. Please log in to download.

© 2026 DERSHENG CO., LTD. All rights reserved.