RA Series

Wheel Diameter × Wheel Width 250 x 63mm

A

YJ-12040410256201



Picture may differ from original product

Drawings are for reference only and may differ from the product

Technical Data

◉ Metric ○ Imperial

Wheel Diameter(D)	250mm
Wheel Width(T2)	63mm
Wheel Bearing	Without Bearing
Axle Bore(d)	—
Axle Bore(S)	52mm
Bearing Bore Depth(t)	15mm
Hub Lenth(T1)	61mm
Hardness Of Tread	75±5° Shore A
Load Capacity (Dynamic)	450kgs
Load Capacity (Static)	675kgs
Temperature	-20°C to +80°C
Electrical Conductivity	N/A
Anti-Static	N/A
Weight	4.91kgs
Standard	ISO22883

Advantages at a glance

Rolling Resistance	●●●○○
Operating Noise	●●●●○
Floor Surface Preservation	●●●●○

2D Dimensional Drawing of Single Wheel

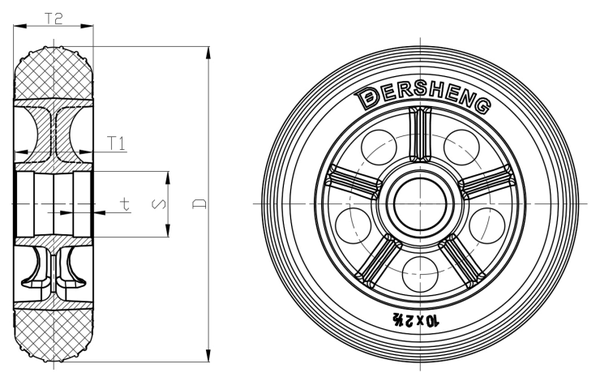

* For any deviation between metric and imperial spec, please refer to the metric spec.

© Copyright 2026 DershengInternational www.dersheng.com