RA Series

Wheel Diameter × Wheel Width 250 x 63mm

A

YJ-12040410256201



Picture may differ from original product

Drawings are for reference only and may differ from the product

Technical Data

◉ Imperial ○ Metric

Wheel Diameter(D)	10 "
Wheel Width(T2)	2-1/2 "
Wheel Bearing	Without Bearing
Axle Bore(d)	—
Axle Bore(S)	1-15/16 "
Bearing Bore Depth(t)	5/8 "
Hub Lenth(T1)	2-7/16 "
Hardness Of Tread	75±5° Shore A
Load Capacity (Dynamic)	992lbs
Load Capacity (Static)	1488lbs
Temperature	-4°F to +176°F
Electrical Conductivity	N/A
Anti-Static	N/A
Weight	10.8lbs
Standard	ISO22883

Advantages at a glance

Rolling Resistance	●●●○○
Operating Noise	●●●●○
Floor Surface Preservation	●●●●○

2D Dimensional Drawing of Single Wheel

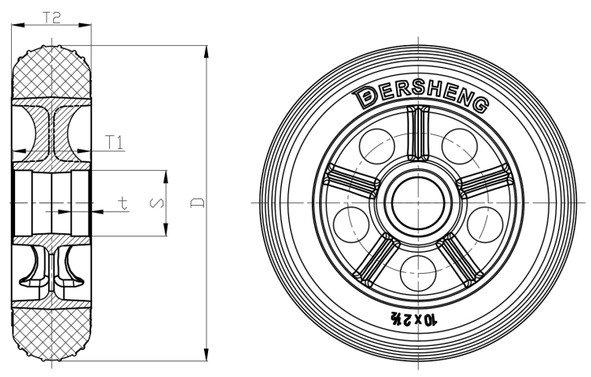

* For any deviation between metric and imperial spec, please refer to the metric spec.

© Copyright 2026 DershengInternational www.dersheng.com